LIGHTING

RANGE CATALOGUE

LED LIGHTING

- TRANSPORT
- MINING
- AGRICULTURAL
- INDUSTRIAL
- AUTOMOTIVE
- MOTORCYCLE

J.W. SPEAKER®
Engineered. Lighting. Solutions.

DELIVERING HI-TECH LIGHTING SOLUTIONS

Invision Sales combines leading technology brands with innovative thinking to drive market growth. Established in 2002, Invision is a multifaceted company that specialises in the sales and marketing of lighting products in the Asia Pacific region.

When Invision Sales prepare a lighting solution for your business or work site, it is done utilising sophisticated 3D CAD software to create an accurate simulation.

Our engineers have the complete range of JW Speaker LED lighting specifications programmed into 3D Simulation Software, so that once your work site environment is created, they are able to design a lighting solution that is precise and accurate.

The lighting simulation means we are able to predict exactly how a particular light unit will perform and how effective it will be.

This process is a free consultation provided by Invision Sales with the aim of ensuring the optimal lighting solution is designed and implemented.

invision
lighting technology

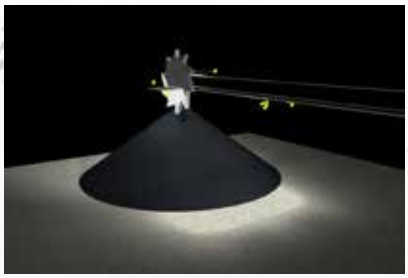

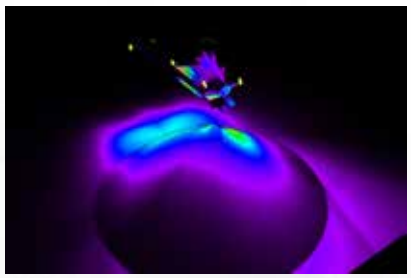

CONSULTATION

Every work environment is different, and a lot of factors must be considered when selecting an optimal light source. Does it require a short intense spread of light, or a wider pattern. Is CRI or colour temperature required and do you require EMI protection.

IP Ratings What do they mean?

The first number of the IP code indicates the degree of protection against solid foreign bodies such as dust intruding into an enclosure. The second number indicates the degree of protection for the equipment inside the enclosure against the harmful entry of various forms of moisture (e.g. dripping, spraying, submersion, etc.) For general outdoor use, IP65 is sufficient to withstand the effects of wind and rain.

First Number

0 No protection provided.
1 Protection against entry of objects larger than 50 square mm.
2 Protection against entry of objects larger than 12 square mm.
3 Protection against entry of objects larger than 2.5 square mm.
4 Protection against entry of objects larger than 1.0 square mm.
5 Protection against entry of dust in sufficient quantity to prevent satisfactory operation.
6 Complete protection against entry of dust.

Second Number

0 No protection provided.
1 Protection against drops of water falling vertically.
2 Protection against drops of water falling vertically when the luminaire is tilted up to 15 degrees from its normal position.
3 Protection from entry of water spray from angle of up to 60 degrees from vertical.
4 Protection from entry of water splashes or spray from any direction.
5 Protection from a low pressure jet of water in any direction.
6 Protection against heavy seas or a strong jet of water in any direction.
7 Protection against immersion up to 1 metre.
8 Protection against submersion over 1 metre.
9 Protection against close-range high pressure, high temperature spray downs.

CRI Colour Rendering Index

CRI or Colour Rendering Index refers to the ability of a light source to show the true colours of an object relative to their natural colour in daylight. CRI is measured on a scale from 0 to 100, with 100 representing true colour. High CRI ratings are incredibly important for industries that rely on true colour such as fruit plantations, vehicle painting and even the medical industry.

CRI Example

As shown in these images, a higher CRI rating of 90 shows vibrant and clear colour compared to the image on the far left which has a rating of 30.
The amount of light shining on the objects is the same, but the difference in CRI rating means one image is dull and lacking in true colour and the other is vibrant and closer to daylight representation.

Lower CRI rating

Higher CRI rating

Colour Temperature (K)

Colour Temperature or Kelvin (K) Rating refers to the colour of a light source in reference to the Kelvin scale. K Rating is often confused with a light's intensity but the two are very different.

Commercial lighting often varies between 3,000K and 6,000K depending on the application. With 5000K considered daylight, many LED manufacturers aim for colour temperatures that offer a more natural looking light.

The difference between 3000K and 6000K is dramatic as highlighted in the images to the right. The 3000K product is much warmer looking compared to the cooler 6000K.

Contents

LED Bulb Conversion Kits

Model 4000
LED Bulb Kits
Page 4

Model 3600
LED Bulb Kits
Page 5

Signalling
LED Signalling Replacements
Page 6-7

CANbus Kits
CANbus to suit LED Kits
Page 8

LED Headlights, Fog Lights & Driving Lights

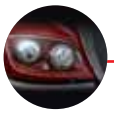

Forward Lighting
Introduction
Page 9

Model 527
LED 10” x 5” Fog Light
Page 10

Model 6150
LED 6” x 2” Fog Light
Page 11

Model 791
LED 6” x 2” Fog Light
Page 12

Model 791
LED 6” x 2” Driving Light
Page 13

Model 8700 EVO S
LED 7” (178mm) Headlight Inserts
Page 14

Model 8710
LED 7” (178mm) Headlight Inserts
Page 15

Model 8700 EVO J2
LED 7” (178mm) Headlight Inserts
Page 16

Model 6145 J2
LED 4” Round Fog Light Inserts
Page 17

Model 8630 EVO
LED 5¾” Round Headlight Insert
Page 18

Model 8631 EVO
LED 5¾” Round Headlight Insert
Page 19

Model 6130 EVO
LED 4¾” Round Headlight Insert
Page 20

Model 6130 EVO
LED 4¾” Round Headlight Insert
Page 21

Model 90
LED 90mm Headlight Inserts
Page 22

Model 91 / 92
LED 90mm Inserts
Page 23

Model 8800 EVO 2
LED 4” x 6” Headlight Inserts
Page 24

Model 8820
LED 4” x 6” Headlight Inserts
Page 25

Model 8900 EVO
LED 5” x 7” Headlight Insert
Page 26

Accessories
For LED Headlight Inserts
Page 28-29

LED Locomotive Headlights

Locomotive Headlights
LED Locomotive Headlights
Page 27

LED Motorcycle Headlights

Motorcycle Headlights
Introduction
Page 30

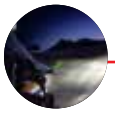

Adaptive Technology
Introduction
Page 31

Model 8790
LED 7” Round Headlights
Page 32

Model 8690
LED 5¾” Round Headlights
Page 33

Model 8720
LED 7” Round Headlights
Page 34

Model 8620
LED 5¾” Round Headlights
Page 35

Contents

LED Worklights

Worklights Intro
XD vs. Normal
Page 36

Model 4415
LED 3.5” Round Worklight
Page 37

Model 770XD
LED 5” x 3” Worklight
Page 38

Model 735
LED 5” x 3” Worklight
Page 39

Model 7250XD
LED 7” x 6” Worklight
Page 40

Model 7150
LED 7” x 5” Worklight
Page 41

Model 840XD
LED 4” x 4” Worklight
Page 42

Model 832
LED 4” x 4” Worklight
Page 43

Model 783XD
LED 6” x 2” Worklight
Page 44

Model 526
LED 6” x 6” Worklight
Page 45

Model 523
LED 9” x 8” Worklight
Page 46

Model 623
LED 20” x 9” Worklight
Page 47

LED Emergency Lighting

Emergency Lighting
Introduction
Page 48

Model 146
LED 65mm Warning Light
Page 49

Model 538
LED 3” Round Strobe Light
Page 50

Model 539
LED 3” Round Strobe Light
Page 51

Model 406
LED 5” Round Strobe Light
Page 52

Model 407
LED 5” Round Strobe Light
Page 53

LED Zone Lighting

Zone Lighting
Introduction
Page 54

Model 4415
LED 3.5” Round Safety Light
Page 55

Model 793
LED 6” x 2” Safety Light
Page 56

Model 770
LED 5” x 3” Safety Light
Page 57

Model 527
LED 10” x 5” Safety Zone Light
Page 58

Model 523BLU
LED 10” x 7” Safety Zone Light
Page 59

LED Signal Lighting

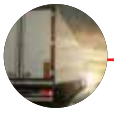
LED Signalling
Introduction
Page 60

Model 223
LED 5” x 5” Multi-Function
Page 61

Model 224
LED 5” x 5” Signal Light
Page 62

Model 265
LED 11” x 4” Multi-Function
Page 63

Model 281
LED 2” x 9” Multi-Function
Page 64

Model 283
LED 2” x 9” Multi-Function
Page 65

Model 279J
LED 6” x 8” Jeep Tail Light Kit
Page 66

Model 239J2
LED 3.5” Round Front Indicator
Page 67

AC/DC Converters, AC Input and DC Output Harnesses

Converter Boxes
Page 68

AC Input Harnesses
Page 68

DC Output Harnesses
Page 68

LED Headlight kit

+180% High Performance
Model 4000

PRODUCT SPECIFICATIONS	
Light Source:	LED (Light Emitting Diodes)
Lumen Output:	2000 (Per Bulb)
Colour Temp:	4000K & 6200K
Input Voltage:	12-24V DC
Power:	25W
Body Material:	Aluminium
Standards:	Sealed to IP65
Additional Information:	3 Year Warranty - Standard Driving Conditions (For normal day to day driving and rec 4X4) 1 Year Warranty - Off Highway (For mining and industrial applications) NOT APPROVED FOR ADR, ECE or DOT

JW Speaker are the world leaders in LED headlight technology with a comprehensive product line up for just about every application.

The LED headlight conversion kits have been engineered to offer a precision beam pattern meaning there is no glare for oncoming traffic and gives the driver a full spread of light on the road in the areas they need it. The spread of light is also incredibly even meaning there are no hot-spots or dark patches across the road. Also, being shock resistant, these bulbs are also ideal for 4WD and trucks.

More light

Along with beam pattern accuracy, longer life, and colour temperature, LED delivers more light on the road.

180% More light than standard halogen (Model 4000)

150% More light than standard halogen (Model 3600)

Colour temperature

The JW Speaker LED kit offers 2 colour temperatures designed to meet drivers differing needs.

4000K Clean white light (Model 4000)

6200K Ultra white light (Model 4000 & Model 3600)

Standard halogen is rated at 3000K while upgrade halogen is around 4000k.

6200K Colour - Ultra White

Part No.	Base Type
990001	H1
990003	H3
990004	H4
990005	HB3
990006	HB4
990007	H7
990010	H10
990011	H8 / H9 / H11 / H16
990012	HIR2
990013	H13
990880	880 (H27 Straight)
990881	881 (H27 Angle)

4000K Colour - Warm White

Part No.	Base Type
9900044	H4
9900074	H7

LED Headlight kit

+150% Performance
Model 3600

PRODUCT SPECIFICATIONS	
Light Source:	LED (Light Emitting Diodes)
Lumen Output:	1800 (Per Bulb)
Colour Temp:	6200K
Input Voltage:	12-24V DC
Power:	18W
Body Material:	Aluminium
Standards:	Sealed to IP65
Additional Information:	2 Year Warranty - Standard Driving Conditions (For normal day to day driving and rec 4X4) NOT APPROVED FOR ADR, ECE or DOT

Halogen filaments are old technology

Extremely accurate light source delivers a precision beam pattern which results in no glare for oncoming traffic. The spread of light is incredibly even meaning there are no hot-spots or dark patches across the road.

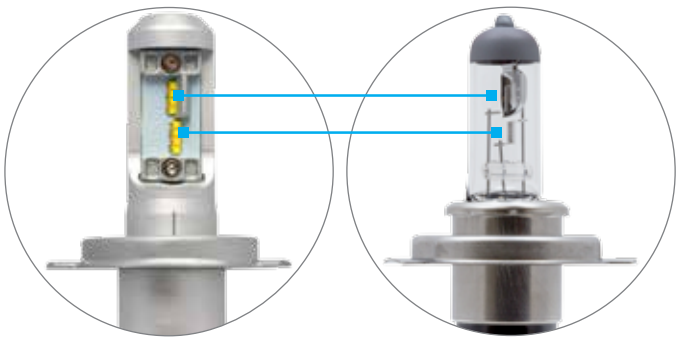

LED ultra long life

LED has an ultra long life with an expected 30,000 hours. Standard halogen is rated at 500 hours and halogen long life 1,500 hours. LED is also resistant to shock which is a major cause for halogen bulbs failing.

6200K Colour - Ultra White

Part No.	Base Type
990001D	H1
990003D	H3
990004D	H4
990005D	HB3 / H10
990006D	HB4
990007D	H7
990011D	H8 / H9 / H11 / H16
990012D	HIR2
990013D	H13

Note: Model 4000 in illustration

LED Signalling

LED Bulb Kits - Premium Performance

Festoon Replacement Range

Part No.	Base Type	Colour	Bulb Type	Lumen	Pack Qty.	Voltage
990100	SV8.5 / 31 x 10.5	White 6000K	C5W	68LM	Single	12V
990102	SV8.5 / 36 x 10.5	White 6000K	C10W	68LM	Single	12V
990104	SV8.5 / 41 x 10.5	White 6000K	C21W	68LM	Single	12V

Bayonet Replacement Range

Part No.	Base Type	Colour	Bulb Type	Lumen	Pack Qty.	Voltage
990140	BA15s	White 6000K	P21W	360LM	Twin	12V-24V
990142	BAU15s	Amber	PY21W	250LM	Twin	12V-24V
990144	BAY15d	White 6000K	P21/5W	360/120LM	Twin	12V-24V

Part No.	Base Type	Colour	Bulb Type	Lumen	Pack Qty.	Voltage
990145	BA15s	White 6000K	R5W & R10W	280LM	Twin	12V-24V

Part No.	Base Type	Colour	Bulb Type	Lumen	Pack Qty.	Voltage
990147	BA9s	White 6000K	T4W	68LM	Twin	12V
990148	BA9s	White 6000K	T4W	68LM	Twin	24V

LED Signalling

LED Bulb Kits - Premium Performance

Wedge Replacement Range

Part No.	Base Type	Colour	Bulb Type	Lumen	Pack Qty.	Voltage
990110	T10	White 6000K	W5W	65LM	Twin	12V
990111	T10	White 6000K	W5W	65LM	Twin	24V

Part No.	Base Type	Colour	Bulb Type	Lumen	Pack Qty.	Voltage
990114	T10 (CANbus)	White 6000K	W5W	98LM	Twin	12V

Part No.	Base Type	Colour	Bulb Type	Lumen	Pack Qty.	Voltage
990120	T16	White 6000K	W16W	350LM	Twin	12V-24V
990122	T16	Amber	WY16W	250LM	Twin	12V-24V

Part No.	Base Type	Colour	Bulb Type	Lumen	Pack Qty.	Voltage
990124	T20	White 6000K	W21W	360LM	Twin	12V-24V
990126	T20	Amber	WY21W	250LM	Twin	12V-24V
990128	T20	White 6000K	W21/5W	360/120LM	Twin	12V-24V

Part No.	Base Type	Colour	Bulb Type	Lumen	Pack Qty.	Voltage
990130	S8	White 6000K	3157	360/120LM	Twin	12V-24V
990132	S8	Amber	3157	253/88LM	Twin	12V-24V

Resistor range

Part No.	Type	Pack Qty.	Voltage
990160	5W	Twin	12V
990161	25W	Twin	12V

CANbus Kits

To Suit LED Bulb Kit Range

CANBUS KITS FOR MODEL 4000 & 3600

Information is for both the Model 4000 and Model 3600.

Some vehicle electronic systems may conflict with the LED bulb.
There are a limited number of vehicles who's electronic systems may require the addition of a CANbus unit during installation. The CANbus unit will allow the vehicles electronics to accept the LED bulb into its system.
Before fitting the LED headlight conversion kit, we suggest you consult a qualified Auto Electrician or call Invision Sales to see if your vehicle is listed as requiring a CANbus product. The majority of vehicles will not require any additional products.

Part No. 990004RCB. H4 Resistor.

Part No. 990007RCB24. H7 Resistor.

Part No. 990007ECB. H7 Electronic.

Electronic CANbus Kits

For Model 3600 & 4000 LED Bulb Kits

Part No.	Base Type	CANbus Type	Voltage
990004ECB	H4	Electronic	12V
990005ECB	HB3 / HB4	Electronic	12V
990007ECB	H7	Electronic	12V
990011ECB	H8 / H9 / H11 / H16	Electronic	12V
990012ECB	HIR2	Electronic	12V

Resistor CANbus Kits

For Model 3600 & 4000 LED Bulb Kits

Part No.	Base Type	CANbus Type	Voltage
990004RCB	H4	Resistor	12V
990004RCB24	H4	Resistor	24V
990005RCB	HB3	Resistor	12V
990006RCB	HB4	Resistor	12V
990007RCB	H7	Resistor	12V
990007RCB24	H7	Resistor	24V
990011RCB	H8 / H9 / H11 / H16	Resistor	12V

Forward Lighting

JW Speaker have been setting new standards in LED headlights for nearly a decade with continuous innovation and development that has seen the range grow to meet the specific needs of many industries.

JW Speaker has developed a complete LED forward lighting solution for just about everything including trucks, 4WD's, mining vehicles and motorcycles. All of these lighting solutions are exact replacements making extremely easy to upgrade old halogen headlight bulbs and sealed beams to the high powered, pure clean white light of LED.

Model 527

LED 10” x 5” Fog Light for Heavy Transport Vehicles

PRODUCT SPECIFICATIONS

Light Source:	LED (Light Emitting Diodes)
Lumen Output:	Raw: 1,500 (White); 960 (Amber) Effective: 640 (White); 400 (Amber)
Input Voltage:	12V - 24V DC
Current Draw:	1.2A @ 12V DC 0.8A @ 24V DC
Lens Material:	Glass
Body Material:	Xenoy Resin
Mounting:	Universal Pedestal Mount (x2) M8-1.25 Mounting Bolt
Connector:	Integrated 2-Pin Deutsch Weather Proof Socket (DT04-2P)
Wiring:	Black Wire: Negative Red Wire: Positive
Standards:	Sealed to IP69K

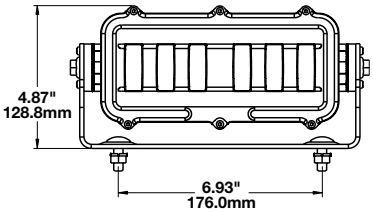

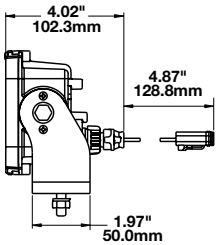

EFFECTIVE LUMENS ISOLUX CHARTS

Illuminance

- 10+ Lux
- 1 Lux
- 0.25 Lux

“Keep Out” Pattern (6m high at 0˚)

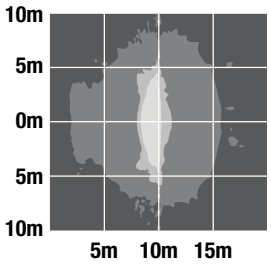

527 Product Range

Part No.	Pattern	Light Colour	Size	Pack Qty
0551261	Fog	White	10” x 5”	Single
0551281	Fog	Amber	10” x 5”	Single

Model 6150

LED 4” Round Pedestal Fog Lights

PRODUCT SPECIFICATIONS

Light Source:	LED (Light Emitting Diodes)
Lumen Output:	Raw: 1,080 Effective: 610
Input Voltage:	12V DC
Current Draw:	1.5A @ 12V DC
Lens Material:	Hard-Coated Polycarbonate
Body Material:	Aluminium
Mounting:	Pedestal mount (x1) M8-1.25 x 25 SS Mounting Bolt
Connector:	Bare Wires
Wiring:	Red Wire: Positive Black Wire: Negative
Standards:	Sealed to IP67 ECE Reg 19 SAE J583

EFFECTIVE LUMENS ISOLUX CHARTS

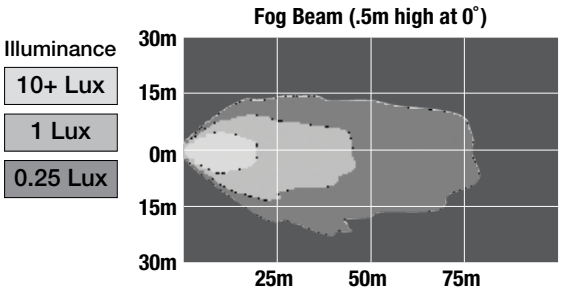

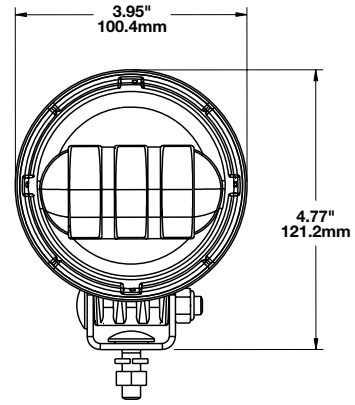

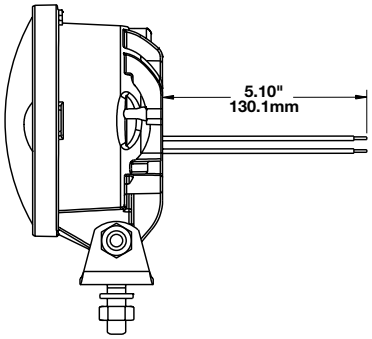

6150 Product Range

Part No.	Pattern	Bezel	Size	Pack Qty
0547981	Fog (6150)	Black	4” Round	Single
0547951	Fog (6150)	Chrome	4” Round	Single

J.W. SPEAKER
Engineered. Lighting. Solutions.

Model 791

LED 6” x 2” Fog Light

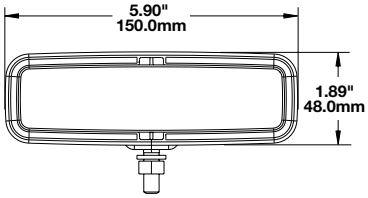

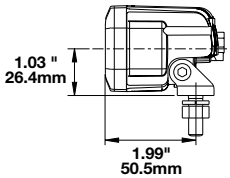

PRODUCT SPECIFICATIONS

Light Source:	LED (Light Emitting Diodes)
Lumen Output:	Raw: 800 Effective: 250
Candela Output:	6,700
Input Voltage:	12V DC
Current Draw:	0.88A @ 12V DC
Lens Material:	Polycarbonate
Body Material:	Aluminium
Mounting:	Pedestal / Pendant (x2) 5/16-18 x 1.00” Mounting Bolt
Connector:	Integrated 2-Pin Deutsch Connector Mating plug DT06-2S
Wiring:	Black Wire: Negative Red Wire: Positive
Weight:	0.45 kgs
Standards:	Sealed to IP69K SAEJ 578 & 583 ECE Reg 19 Tested to ECE Reg. 10 (Radiated Emissions Only)

EFFECTIVE LUMENS ISOLUX CHARTS

Illuminance

- 10+ Lux
- 1 Lux
- 0.25 Lux

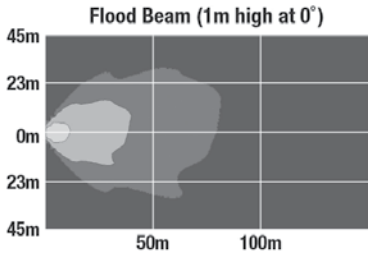

791 Product Range

Part No.	Pattern	Colour Temp	Size	Pack Qty
1603601	Fog	White 4750K	6” x 2”	Single

Model 791

LED 6” x 2” Driving Light

PRODUCT SPECIFICATIONS

Light Source:	LED (Light Emitting Diodes)
Lumen Output:	Raw: 1,820 Effective: 1,150
Input Voltage:	12V - 24V DC
Current Draw:	1.27A @ 12V DC 0.78A @ 24V DC
Lens Material:	Polycarbonate
Body Material:	Aluminium
Mounting:	Pedestal / Pendant (x2) 5/16-18 x 1.00” Mounting Bolt
Connector:	Integrated 2-Pin Deutsch Connector Mating plug DT06-2S
Wiring:	Black Wire: Negative Red Wire: Positive
Weight:	0.39 kgs
Standards:	Sealed to IP67

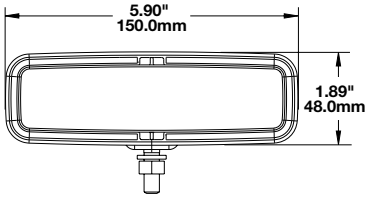

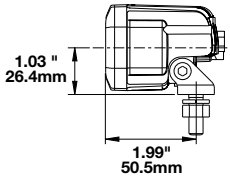

EFFECTIVE LUMENS ISOLUX CHARTS

Illuminance

- 10+ Lux
- 1 Lux
- 0.25 Lux

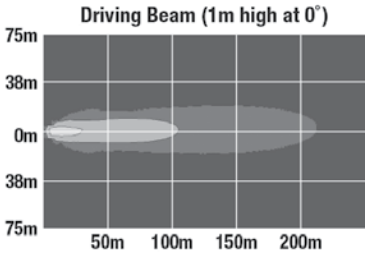

791 Product Range

Part No.	Pattern	Colour Temp	Size	Pack Qty
1603511	Driving	White 5000K	6” x 2”	Single

J.W. SPEAKER
Engineered. Lighting. Solutions.

Model 8700 EVO S

LED 7” (178mm) Headlight Inserts

(Low Beam / High Beam / Park / DRL)

New Dual Burn Technology

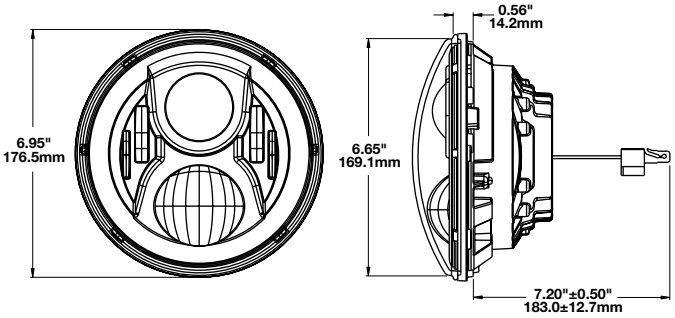

PRODUCT SPECIFICATIONS

Light Source:	LED (Light Emitting Diodes)
Lumen Output:	Raw: 2,610 (High); 1,770 (Low) Effective: 1,150 (High); 750 (Low)
Candela Output:	High Beam: 60,897 Low Beam: 35,003
Input Voltage:	12V - 24V DC
Maximum Current Draw:	3.00A @ 12V DC (High Beam)
Lens Material:	Polycarbonate
Body Material:	Aluminium
Mounting:	2D1 “PAR56” or 7” round headlights
Connector:	H4
Wiring:	Black Wire: Ground Yellow Wire: Low Beam White Wire: High Beam Red Wire: Park (Front Position) Blue Wire: Daytime Running Light
Standards:	Sealed to IP67 ECE Reg 7, 87 & 112

EFFECTIVE LUMENS ISOLUX CHARTS

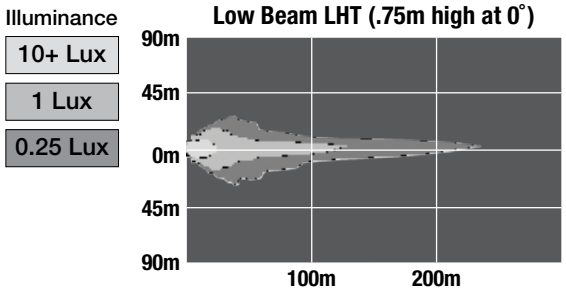

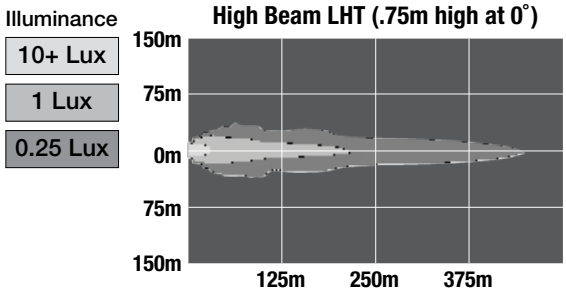

8700 EVO S Product Range

Part No.	Pattern	Bezel	Size	Pack Qty
0552751	Low/High/Park/DRL	Black	7” Round	Single
0553311	Low/High/Park/DRL	Chrome	7” Round	Single

8700 EVO S Product Accessories - (Page 29)

Part No.	Description	Pack Qty
3156351	8700 - Mounting Ring Kit Assembly	Single
3156561	8700 - Panel Mount Bucket Assembly	Single
3157091	8700 - Side Mount Bucket Assembly	Single
3266081	H4 - H13 Jumper Harness to suit Jeep	Single

Model 8710

LED 7” (178mm) Headlight Inserts
(High Beam)

TS4000 Product Range
(8710 Pedestal Mount)

PRODUCT SPECIFICATIONS

Light Source:	LED (Light Emitting Diodes)
Lumen Output:	Raw: 3,300 Effective: 1,440
Candela Output:	133,000
Input Voltage:	12V - 24V DC
Current Draw:	4.80A @ 12V DC 2.50A @ 24V DC
Lens Material:	Polycarbonate
Body Material:	Aluminium
Mounting:	2D1 “PAR56” or 7” round headlights Optional Pedestal Mount: (x1) 3/8-16 x 1.5” Stainless Steel Screw
Connector:	H4
Wiring:	Black Wire: Ground White Wire: Positive
Standards:	Sealed to IP67 ECE Reg 112

EFFECTIVE LUMENS ISOLUX CHARTS

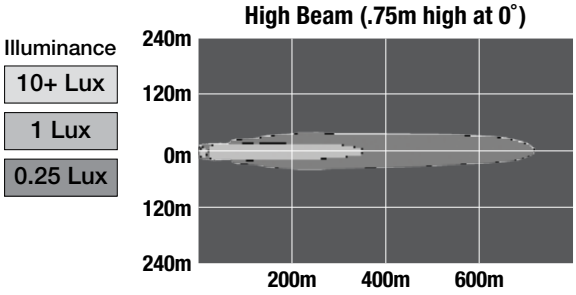

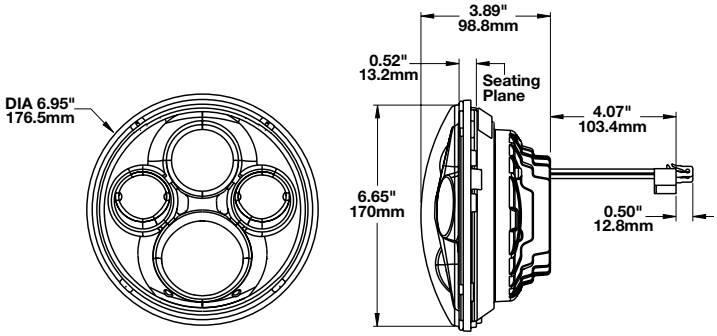

8710 Product Range

Part No.	Pattern	Bezel	Size	Pack Qty
0550011	High Beam	Chrome	7” Round	Single
0550021	High Beam	Black	7” Round	Single

TS4000 Product Range (8710 Pedestal Mount)

Part No.	Pattern	Bezel	Pack Qty
0551603	Driving Beam	Chrome	Twin Pack
0551693	Driving Beam	Black	Twin Pack

8710 Product Accessories - (Page 29)

Part No.	Description	Pack Qty
3156351	8700 - Mounting Ring Kit Assembly	Single
3156561	8700 - Panel Mount Bucket Assembly	Single
3266081	H4 - H13 Jumper Harness to suit Jeep	Single

J.W. SPEAKER
Engineered. Lighting. Solutions.

Model 8700 EVO J2

LED 7” (178mm) Headlight Inserts

Designed for Jeep (Low Beam/High Beam/Park/DRL)
New Dual Burn Technology

Designed specifically to suit Jeep

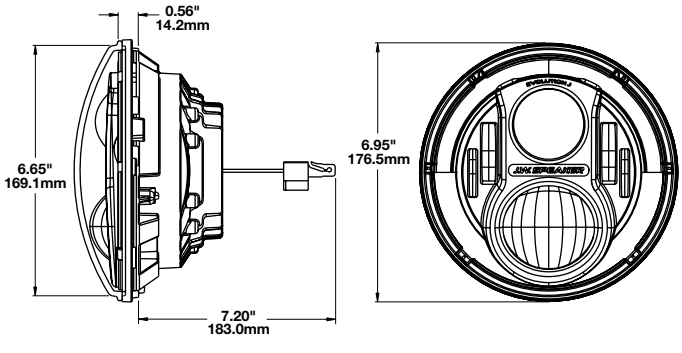

PRODUCT SPECIFICATIONS

Light Source:	LED (Light Emitting Diodes)
Lumen Output:	Raw: 2,610 (High); 1,770 (Low) Effective: 1,150 (High); 750 (Low)
Candela Output:	High Beam: 60,897 Low Beam: 35,003
Input Voltage:	12V DC
Current Draw:	3.00A @ 12V DC (High Beam) 2.00A @ 12V DC (Low Beam) 1.60A @ 12V DC (DRL) 0.16A @ 12V DC (Front Position)
Lens Material:	Polycarbonate
Body Material:	Aluminium
Mounting:	2D1 “PAR56” or 7” round headlights
Connector:	H4
Wiring:	Black Wire: Ground Yellow Wire: Low Beam White Wire: High Beam Red Wire: Park (Front Position) Blue Wire: Daytime Running Light
Standards:	Sealed to IP67 ECE Reg 7, 87 & 112
Additional Information:	EVO J is designed with integrated anti-flicker technology which eliminates errors caused by Jeep electrical systems.

EFFECTIVE LUMENS ISOLUX CHARTS

Illuminance
10+ Lux
1 Lux
0.25 Lux

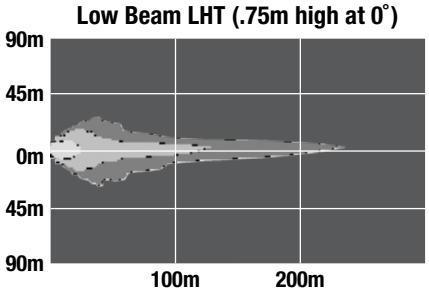

EFFECTIVE LUMENS ISOLUX CHARTS

Illuminance
10+ Lux
1 Lux
0.25 Lux

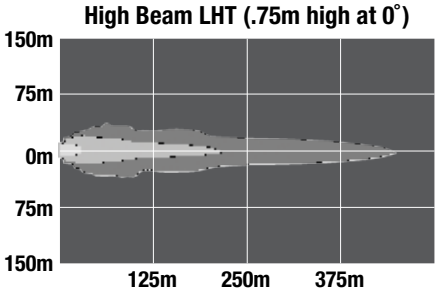

8700 EVO J2 Product Range

Part No.	Pattern	Bezel	Size	Pack Qty
0553993	Low/High/Park/DRL	Carbon	7” Round	Twin Pack
0554563	Low/High/Park/DRL	Black	7” Round	Twin Pack

Model 6145 J2

LED 4” Round Fog Light Inserts Designed For Jeep Bumper Retro-Fit

PRODUCT SPECIFICATIONS

Light Source:	LED (Light Emitting Diodes)
Lumen Output:	Raw: 1,080 Effective: 610
Input Voltage:	12V DC
Current Draw:	1.6A @ 12V DC
Lens Material:	Hard-Coated Polycarbonate
Body Material:	Aluminium
Mounting:	Bumper Mount
Connector:	Packard (#12084167)
Wiring:	Red Wire: Positive Black Wire: Negative
Standards:	Sealed to IP67 ECE Reg 19 Tested to ECE Reg. 10 (Radiated Emissions only) SAE J583
Additional Information:	Model 6145 J2 is suitable for the following vehicles: 2014 - 2016 Jeep Wrangler 2-Door (JK) 2014 - 2016 Jeep Wrangler Unlimited 4-Door (JK)

Designed specifically to suit Jeep

EFFECTIVE LUMENS ISOLUX CHARTS

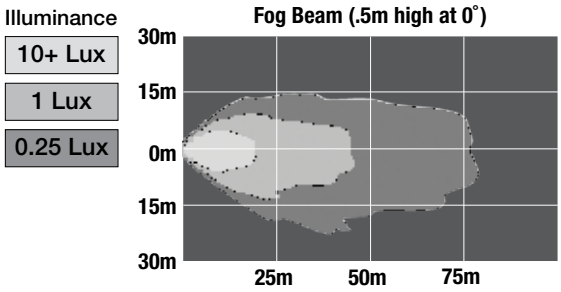

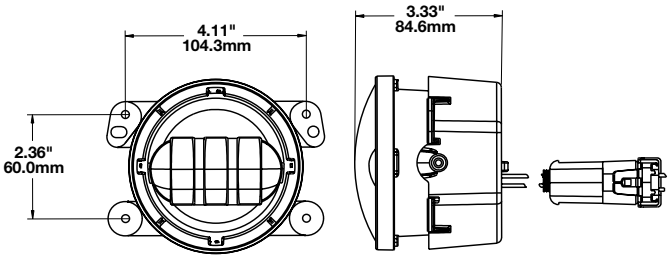

6145 J2 Product Range

Part No.	Pattern	Bezel	Size	Pack Qty
0554413	Fog	Carbon	4” Round	Twin Pack
0554573	Fog	Black	4” Round	Twin Pack

J.W. SPEAKER
Engineered. Lighting. Solutions.

Model 8630 EVO

LED 5¾" Round Headlight Insert
(Low Beam / High Beam / Park / DRL)

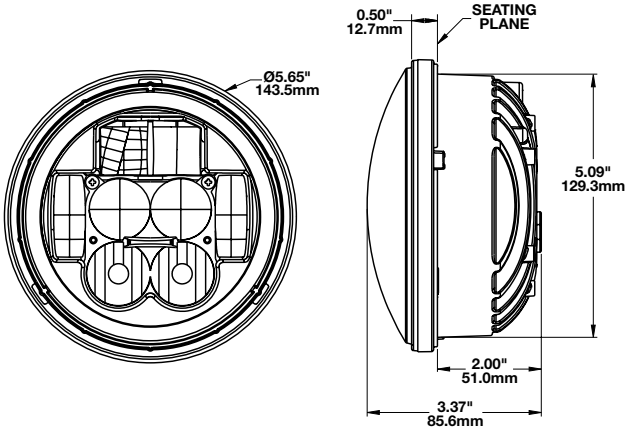

PRODUCT SPECIFICATIONS

Light Source:	LED (Light Emitting Diodes)
Lumen Output:	Raw: 2,925 (High); 2,025 (Low) Effective: 1,000 (High); 630 (Low)
Candela Output:	High Beam: 61,684 Low Beam: 19,162
Input Voltage:	12V - 24V DC
Maximum Current Draw:	3.50A @ 12V DC (High Beam)
Lens Material:	Polycarbonate
Body Material:	Aluminium
Mounting:	PAR46 sealed beams
Connector:	Integral Connector in Housing simulating Delphi 12124107
Wiring:	Black Wire: Ground White Wire: High Beam Yellow Wire: Low Beam Red Wire: Park (Front Position) Purple Wire: Daytime Running Light
Standards:	Sealed to IP67 ECE Reg 7, 87 & 112

EFFECTIVE LUMENS ISOLUX CHARTS

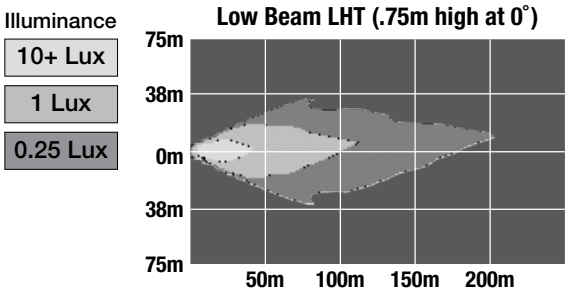

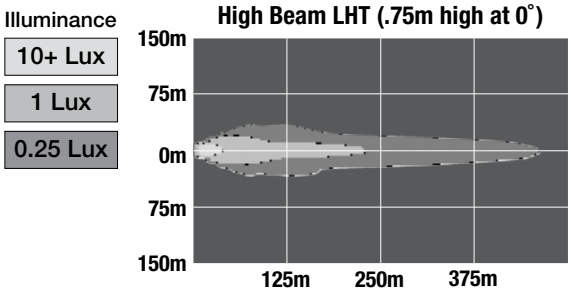

8630 EVO Product Range

Part No.	Pattern	Size	Pack Qty
0549921	Low/High/Park/DRL	5¾" Round	Single

8630 EVO Product Accessories - (Page 29)

Part No.	Description	Pack Qty
3157751	8630 - Double Ring Kit Mounting Assembly	Single
8200001	8630 - Single Ring Kit Mounting Assembly	Single

Model 8631 EVO

LED 5¾" Round Headlight Insert

(Low Beam / High Beam / Park / DRL / Turn Signal)

8632 Pedestal Mount

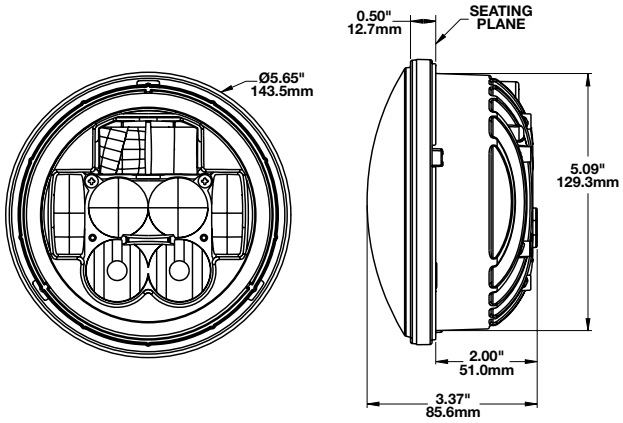

PRODUCT SPECIFICATIONS

Light Source:	LED (Light Emitting Diodes)
Lumen Output:	Raw: 2,925 (High); 2,025 (Low) Effective: 1,000 (High); 630 (Low)
Candela Output:	High Beam: 61,684 Low Beam: 19,162
Input Voltage:	12V - 24V DC
Maximum Current Draw:	3.50A @ 12V DC (High Beam)
Lens Material:	Polycarbonate
Body Material:	Aluminium
Mounting:	PAR46 sealed beams
Connector:	Integral Connector in Housing simulating Delphi 12124107
Wiring:	Black Wire: Ground White Wire: High Beam Yellow Wire: Low Beam Red Wire: Park (Front Position) Purple Wire: Daytime Running Light Orange / White Wire: Turn (Indicator)
Standards:	Sealed to IP67 ECE Reg 6, 7, 87 & 112

EFFECTIVE LUMENS ISOLUX CHARTS

Illuminance

10+ Lux

1 Lux

0.25 Lux

Low Beam LHT (.75m high at 0˚)

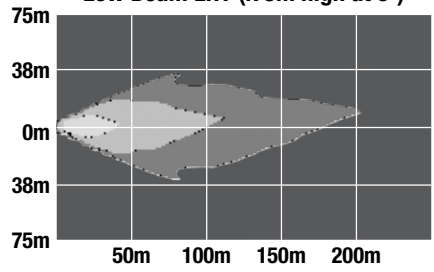

Illuminance

10+ Lux

1 Lux

0.25 Lux

High Beam LHT (.75m high at 0˚)

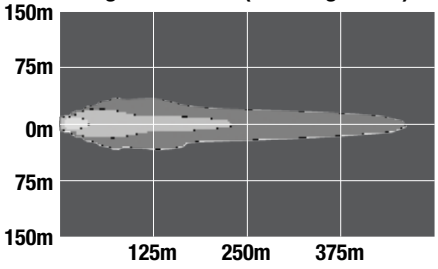

8631 EVO Product Range

Part No.	Pattern	Size	Pack Qty
0551641	Low/High/Park/DRL/Turn	5¾" Round	Single

8632 EVO Product Range - Pedestal Mount

Part No.	Pattern	Size	Pack Qty
0551973	Low/High/Park/DRL/Turn	5¾" Round	Twin Pack

8631 EVO Product Accessories - (Page 29)

Part No.	Description	Pack Qty
3157751	8631 - Double Ring Kit Mounting Assembly	Single
8200001	8631 - Single Ring Kit Mounting Assembly	Single

J.W. SPEAKER
Engineered. Lighting. Solutions.

Model 6130 EVO

LED 4¾" Round Headlight Insert

(Low Beam / DRL) & (High Beam / Park)

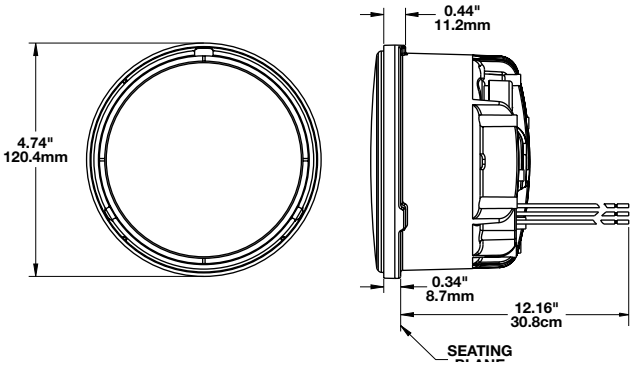

PRODUCT SPECIFICATIONS

Light Source:	LED (Light Emitting Diodes)
Lumen Output:	Raw: 1,760 (High); 1,690 (Low) Effective: 955 (High); 640 (Low)
Input Voltage:	12V - 24V DC
Current Draw:	**0549861 - Low / DRL** 2.07A @ 12V DC (Low Beam) 0.96A @ 24V DC (Low Beam) 0.44A @ 12V DC (DRL) 0.24A @ 24V DC (DRL) **0549871 - High / Park** 1.84A @ 12V DC (High Beam) 0.84A @ 24V DC (High Beam) 0.11A @ 12V DC (Front Position) 0.09A @ 24V DC (Front Position)
Lens Material:	Polycarbonate
Body Material:	Aluminium
Mounting:	PAR38 sealed beams
Connector:	12" Flying Leads
Wiring:	Black Wire: Ground White Wire: Low & High Beam Yellow Wire: DRL & Park (Front Position)
Standards:	Sealed to IP67 ECE Reg 112 ECE Reg 7 (High) ECE Reg 87(Low)

EFFECTIVE LUMENS ISOLUX CHARTS

Illuminance
10+ Lux
1 Lux
0.25 Lux

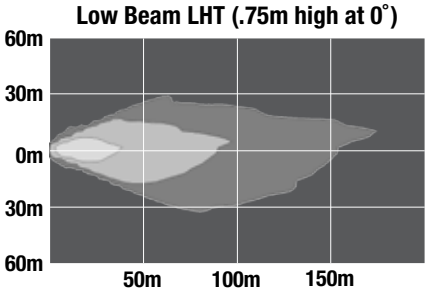

EFFECTIVE LUMENS ISOLUX CHARTS

Illuminance
10+ Lux
1 Lux
0.25 Lux

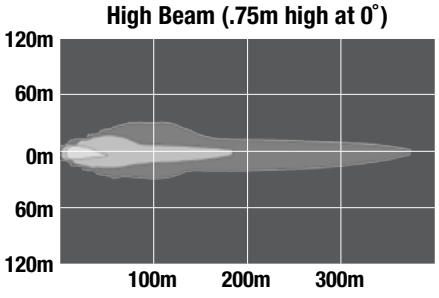

6130 EVO Product Range

Part No.	Pattern	Bezel	Size	Pack Qty
0549861	Low/DRL	Black	4¾" Round	Single
0549871	High/Park	Black	4¾" Round	Single

6130 Product Accessories - (Page 29)

Part No.	Description	Pack Qty
8000861	Single ring kit mounting assembly	Single

Model 6130 EVO

LED 4¾" Round Headlight Insert

(Low Beam / High Beam / Park)

PRODUCT SPECIFICATIONS

Light Source:	LED (Light Emitting Diodes)
Lumen Output:	Raw: 2,230 (High); 1,330 (Low) Effective: 840 (High); 440 (Low)
Input Voltage:	12V - 24V DC
Current Draw:	3.00A @ 12V DC (High Beam) 1.43A @ 24V DC (High beam) 2.30A @ 12V DC (Low Beam) 1.01A @ 24V DC (Low Beam) 0.12A @ 12V DC (Front Position) 0.09A @ 24V DC (Front Position)
Lens Material:	Polycarbonate
Body Material:	Aluminium
Mounting:	PAR38 sealed beams
Connector:	12" Flying Leads
Wiring:	Black Wire: Ground White Wire: High Beam Yellow Wire: Low Beam Red Wire: Park (Front Position)
Standards:	Sealed to IP67 ECE Reg 7 & 112

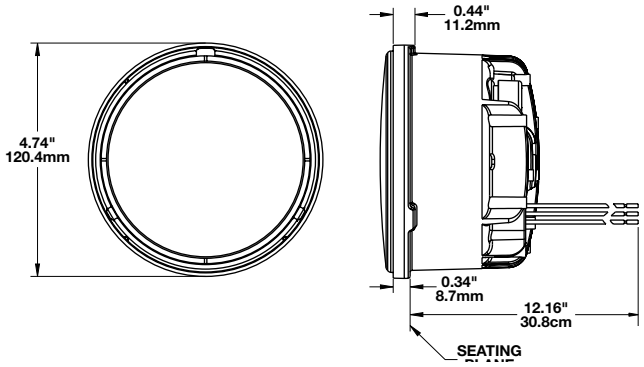

EFFECTIVE LUMENS ISOLUX CHARTS

Illuminance

10+ Lux

1 Lux

0.25 Lux

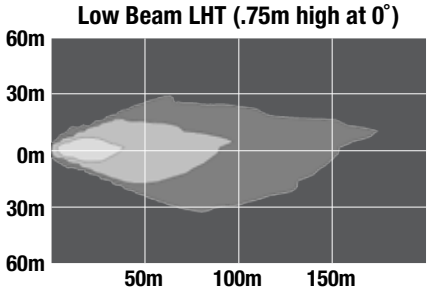

EFFECTIVE LUMENS ISOLUX CHARTS

Illuminance

10+ Lux

1 Lux

0.25 Lux

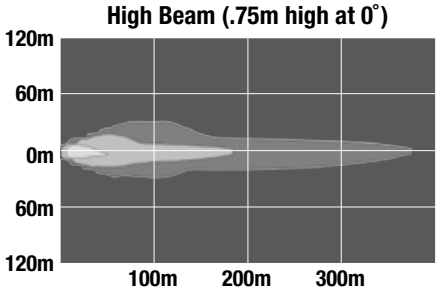

6130 EVO Product Range

Part No.	Pattern	Bezel	Size	Pack Qty
0549891	Low/High/Park	Black	4¾" Round	Single

6130 Product Accessories - (Page 29)

Part No.	Description	Pack Qty
8000861	Single ring kit mounting assembly	Single

Model 90

LED 90mm Headlight Inserts

(Low Beam) & (High Beam / Park)

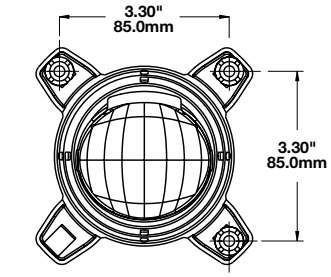

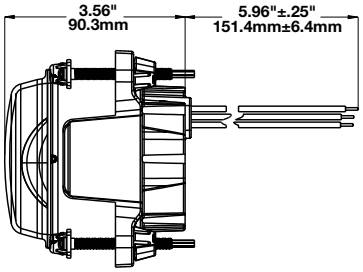

PRODUCT SPECIFICATIONS

Light Source:	LED (Light Emitting Diodes)
Candela Output:	High Beam: 45,000 Low Beam: 18,500
Input Voltage:	12 - 24V DC
Current Draw:	1.97A @ 12V DC (Low Beam) 0.98A @ 24V DC (Low Beam) 0.80A @ 12V DC (High Beam) 0.40A @ 24V DC (High Beam) 0.40A @ 12V DC (Front Position) 0.20A @ 24V DC (Front Position)
Lens Material:	Polycarbonate
Body Material:	Aluminium
Mounting:	Low Profile Panel Mount
Connector:	6" Bare Leads
Wiring:	Red Wire: Positive Black Wire: Negative White Wire: Park (Front Position)
Standards:	Sealed to IP67 ECE Reg 112 ECE Reg 7 (0547751) FMVSS 108 Table XVIII (0547751) FMVSS 108 Table XIX (0547801)

EFFECTIVE LUMENS ISOLUX CHARTS

Illuminance

10+ Lux

1 Lux

0.25 Lux

Low Beam LHT (.75m high at 0˚)

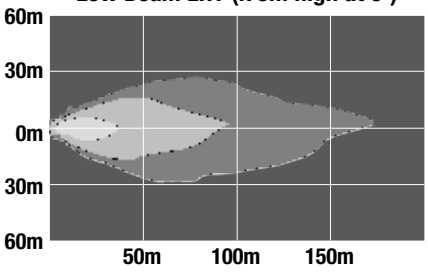

Illuminance

10+ Lux

1 Lux

0.25 Lux

High Beam (.75m high at 0˚)

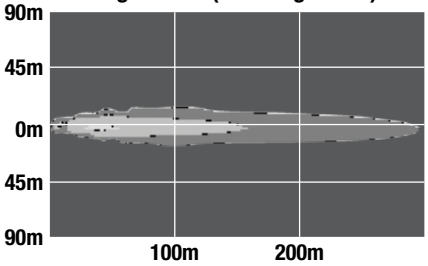

90 Product Range

Part No.	Pattern	Size	Pack Qty
0551201	Low Beam	90mm Round	Single
0547751	High Beam/Park	90mm Round	Single

90 Product Accessories - (Page 29)

Part No.	Description	Pack Qty
8200111	Replacement Adjuster Kit	Single

Model 91/92

LED 90mm Inserts

(Park / DRL / Turn Signal) & (Fog Beam / DRL)

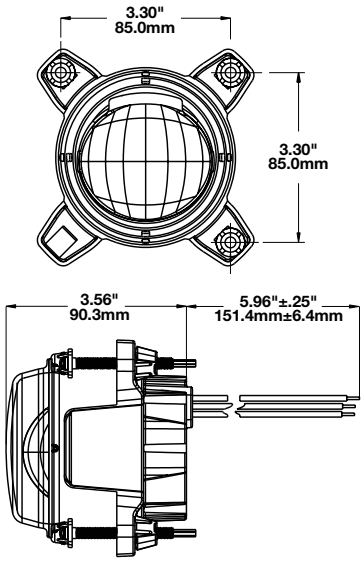

PRODUCT SPECIFICATIONS

Light Source:	LED (Light Emitting Diodes)	
Lumen Output:	**Model 92** Raw: 720 (Fog) Effective: 350 (Fog)	
Input Voltage:	12 -24V DC	
Current Draw:	**Model 91** 1.6A @ 12V DC (Directional Indicator) 1.3A @ 24V DC (Directional Indicator) 0.6A @ 12V DC (DRL) 0.35A @ 24V DC (DRL) 0.07A @ 12V DC (Front Position) 0.04A @ 24V DC (Front Position) **Model 92** 0.80A @ 12V DC (Fog) 0.45A @ 24V DC (Fog) 0.60A @ 12V DC (DRL) 0.35A @ 24V DC (DRL)	
Lens Material:	Hard-Coated Polycarbonate	
Body Material:	Aluminium	
Mounting:	Low Profile Panel Mount	
Connector:	6” Bare Leads	
Wiring:	Model 91 Red Wire: Position Black Wire: Ground White Wire: Turn	Model 92 Red Wire: Fog Black Wire: Ground Yellow Wire: DRL
Standards:	Sealed to IP67 ECE Reg 6.01 (Directional Indicator) ECE Reg 87 (DRL) ECE Reg 7 (Front Position) ECE Reg 19.04 (Fog) SAE J2087	

91 Product Range

Part No.	Pattern	Size	Pack Qty
0345591	Park/DRL/Turn	90mm Round	Single

92 Product Range

Part No.	Pattern	Size	Pack Qty
0549501	Fog/DRL	90mm Round	Single

91 / 92 Product Accessories - (Page 29)

Part No.	Description	Pack Qty
8200111	Replacement Adjuster Kit (3 Piece)	Single

Model 8800 EVO 2

LED 4” x 6” Headlight Inserts

(Low Beam) & (High Beam)

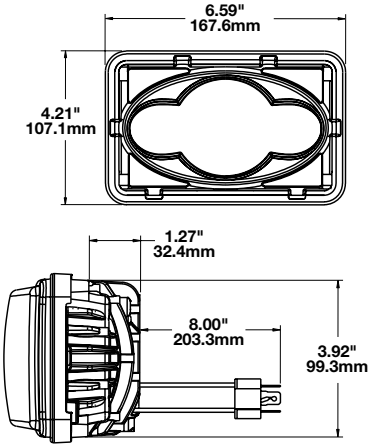

PRODUCT SPECIFICATIONS

Light Source:	LED (Light Emitting Diodes)
Lumen Output:	Raw: 3,000 (Low); Effective: 890 (High); 740 (Low)
Candela Output:	High Beam: 73,200 Low Beam: 29,800
Input Voltage:	12-24V DC
Current Draw:	2.10A @ 12V DC 1.00A @ 24V DC
Lens Material:	Polycarbonate
Body Material:	Aluminium
Mounting:	1A1 and 2A1 (4” x 6”) sealed beams
Connector:	H4 Connector - AMP (#172615-2)
Wiring:	Red Wire: Positive Black Wire: Negative
Standards:	Sealed to IP67 ECE Reg 112 FMVSS 108 Table XIX (Low Beam) FMVSS 108 Table XVIII (High Beam)

EFFECTIVE LUMENS ISOLUX CHARTS

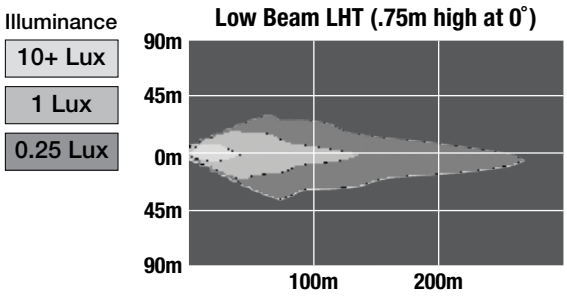

EFFECTIVE LUMENS ISOLUX CHARTS

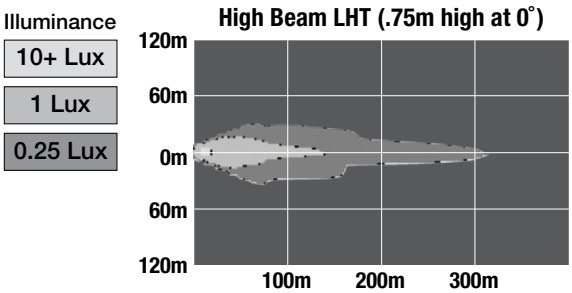

8800 EVO2 Product Range

Part No.	Pattern	Bezel	Size	Pack Qty
0551391	Low Beam	Chrome	4” x 6”	Single
0552561	Low Beam	Black	4” x 6”	Single
0551381	High Beam	Chrome	4” x 6”	Single
0552571	High Beam	Black	4” x 6”	Single

8800 EVO2 Product Accessories - (Page 29)

Part No.	Description	Pack Qty
3156600	Right Hand Dual Headlight Assembly	Single
3156680	Left Hand Dual Headlight Assembly	Single

Model 8820

LED 4” x 6” Headlight Inserts

(Low Beam / High Beam / Park)

PRODUCT SPECIFICATIONS

Light Source:	LED (Light Emitting Diodes)
Lumen Output:	Raw: 2,100 (High); 1,850 (Low) Effective: 755 (High); 645 (Low)
Input Voltage:	12-24V DC
Current Draw:	1.11A @ 12V DC (Low Beam) 0.96A @ 24V DC (Low Beam) 2.14A @ 12V DC (High Beam) 1.56A @ 24V DC (High Beam) 0.056A @ 12V DC (Front Position) 0.065A @ 24V DC (Front Position)
Lens Material:	Polycarbonate
Body Material:	Aluminium
Mounting:	Panel or 3-Point Mount
Connector:	12” Flying Leads
Wiring:	Black Wire: Ground White Wire: High Beam Yellow Wire: Low Beam Red Wire: Park (Front Position)
Standards:	Sealed to IP67 ECE Reg 7 & 112 Military Standard: MIL-PRF-32243

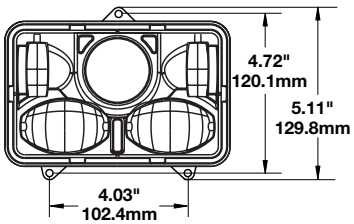

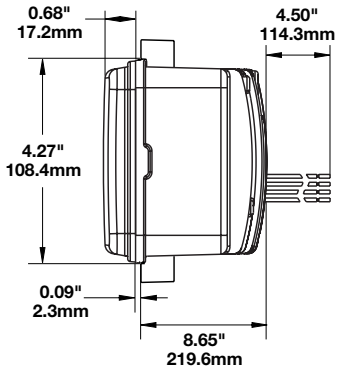

EFFECTIVE LUMENS ISOLUX CHARTS

Illuminance

10+ Lux

1 Lux

0.25 Lux

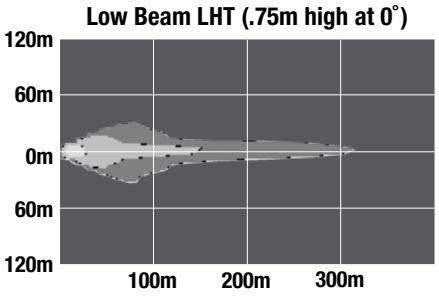

Illuminance

10+ Lux

1 Lux

0.25 Lux

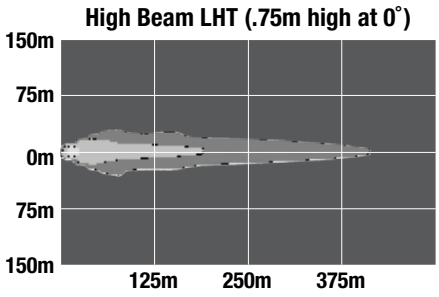

8820 Product Range

Part No.	Pattern	Bezel	Mount Type	Size	Pack Qty
0550941	Low/High/Park	Black	Panel Mount	4” x 6”	Single
0550281	Low/High/Park	Black	3-Point Mount	4” x 6”	Single

Model 8900 EVO

LED 5” x 7” Headlight Insert

(Low Beam / High Beam / Park)

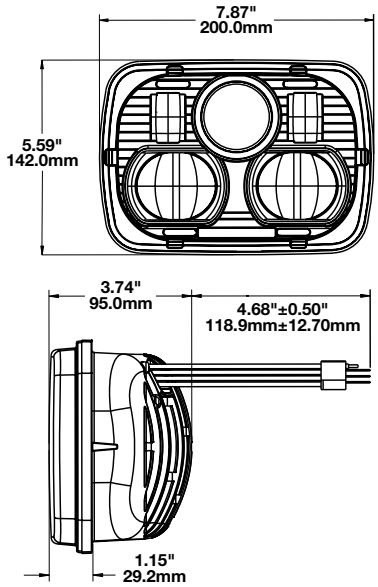

PRODUCT SPECIFICATIONS

Light Source:	LED (Light Emitting Diodes)
Lumen Output:	Raw: 1,770 (High); 1,350 (Low) Effective: 850 (High); 650 (Low)
Candela Output:	High Beam: 54,924 Low Beam: 40,492
Input Voltage:	12 - 24V DC
Current Draw:	2.60A @ 12V DC (High Beam) 2.20A @ 12V DC (Low Beam) 0.20A @ 12V DC (Front Position) 1.23A @ 24V DC (High Beam) 2.20A @ 24V DC (Low Beam) 0.11A @ 24V DC (Front Position)
Lens Material:	Polycarbonate
Body Material:	Aluminium
Mounting:	2B1 5” X 7” headlights
Connector:	H4
Wiring:	Black Wire: Ground Yellow Wire: Low Beam White Wire: High Beam Red Wire: Park (Front Position)
Standards:	Sealed to IP67 ECE Reg 7 & 112

EFFECTIVE LUMENS ISOLUX CHARTS

Illuminance

10+ Lux

1 Lux

0.25 Lux

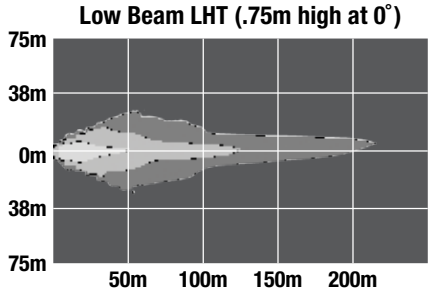

EFFECTIVE LUMENS ISOLUX CHARTS

Illuminance

10+ Lux

1 Lux

0.25 Lux

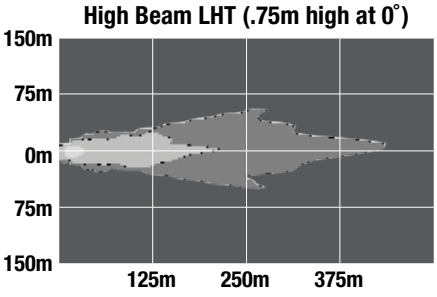

8900 EVO Product Range

Part No.	Pattern	Bezel	Size	Pack Qty
0550121	Low/High/Park	Black	5” x 7”	Single
0550081	Low/High/Park	Chrome	5” x 7”	Single

8900 EVO Product Accessories - (Page 28)

Part No.	Description	Pack Qty
3157041	8900 - Single Bucket Mounting Assembly	Single

LOCOMOTIVE LIGHTING

JW Speaker locomotive range, Model 8770GEN3, offers the most powerful replacement solution for 7" (178mm) Round locomotive headlights (PAR56).

Features

- 200,000 minimum candela.
- Die-cast aluminium housing.
- Polycarbonate Lens for maximum protection.
- Designed to meet Australian Standards: AS7531.1
- Models available to suit 24/75/110 DC Volts

Summary

- Designed for railroad locomotives using only high and low functionality (determined through a control line), the model 8770 can also be used as a ditch light application.
- Additional features include heavy-duty construction, solid-state electronics.
- LEDs are long-lasting, providing years of maintenance-free operation and lower life-cycle costs when compared to standard sealed beams or halogen lamps.

Contact Invision Sales for further information on the JW Speaker Locomotive range.

Accessories

90/91/92 - Adjuster Kit

Part No.	Description	Pack Qty
8200111	Replacement Adjuster Kit (3 Piece)	Single

8800 EVO 2 - Dual Headlight Assembly

Part No.	Description	Pack Qty
3156600	Right Hand Dual Headlight Assembly	Single
3156680	Left Hand Dual Headlight Assembly	Single

527 - Protective Rock Guard Kit

Part No.	Description	Pack Qty
8200151	Protective Rock Guard Kit	Single

8900 EVO - Single Bucket Mounting Assembly

Part No.	Description	Pack Qty
3157041	Single Bucket Mounting Assembly	Single

8630/8631- EVO Single Ring Kit

Part No.	Description	Pack Qty
8200001	Single Ring Kit Mounting Assembly	Single

8630/8631- EVO Double Ring Kit

Part No.	Description	Pack Qty
3157751	Double Ring Kit Mounting Assembly	Single

Accessories

6130 EVO Single Ring Kit

Part No.	Description	Pack Qty
8000861	Single ring kit mounting assembly	Single

8700 EVO S - 8710 Side Mount Bucket Assembly

Part No.	Description	Pack Qty
3157091	Side Mount Bucket Assembly	Single

8700 EVO S - 8710 Mounting Ring

Part No.	Description	Pack Qty
3156351	Mounting Ring Kit Assembly	Single

8700 EVO S - 8710 Panel Mount Bucket Assembly

Part No.	Description	Pack Qty
3156561	Panel Mount Bucket Assembly	Single

8700 EVO S - 8710 H4-H13 Jumper Harness

Part No.	Description	Pack Qty
3266081	H4 - H13 Jumper Harness	Single

J.W. SPEAKER
Engineered. Lighting. Solutions.

Adaptive Headlights

Motorcycle

JW Speaker has instigated a fundamental shift in motorcycle safety and rider comfort with the world's first dynamically adaptive LED motorcycle headlight system. The dark void created to the left or right of the motorcycle while cornering has been a long standing problem with motorcycle headlights and has been a real safety issue. The JW Speaker Adaptive LED headlights have now solved it with a dramatic new technology which detects when the bike is turning and adjusts the beam pattern to illuminate into the bend of the road, eliminating potentially dangerous blind spots.

ADAPTIVE SERIES

Adaptive Headlights

The revolution has begun!

The Model 8790 & 8690 are the world's first dynamically adaptive motorcycle headlights. They were designed to address a particular shortfall of traditional headlights — poor visibility while cornering. As the motorcycle leans into a corner, traditional headlights create a dark void ahead of the rider. The J.W. Speaker Adaptive Motorcycle Headlight™ dynamically fills the darkness with bright, white light and improves the level of comfort and safety for the rider.

They also feature ComfortLite™ high beam optics, heavy-duty, die-cast aluminium housing and state-of-the-art LEDs to not only deliver premium performance, but also give a bike a truly unique look!

Inside the Adaptive Headlights, intelligent on-board sensors and advanced electronics calculate bank angles in real-time to rapidly direct the LED light array up or down as the motorcycle leans. The additional illumination fills the gaps that the forward headlight beam creates when cornering at night.

The Model 8791 & 8691 offer the same functionality as their counterparts, but feature a custom mounting bracket allowing them to be mounted as free-standing headlights on applications without typical mounting buckets.

Cool-looking, comfort-producing, dazzling performance.

An extremely high performance LED upgrade motorcycle headlight.

Our new Model 8690 LED Headlights retrofit all 5.75" and 7" motorcycle bucket systems. And, for the first-time, our unique ComfortLite™ feature works with the low beam, complementing what's already available in high beam mode. This feature provides exceptional foreground lighting that enhances the street-legal, fixed low beam pattern. This not only contributes to a more comfortable experience for the driver but it makes night-time riding safer too.

In addition to superior visibility, extreme durability and unparalleled longevity, the Model 8690 provides a plug & play solution for easy installation.

J.W. SPEAKER
Engineered. Lighting. Solutions.

Model 8790

LED 7” Round Motorcycle Headlights

(Low Beam / High Beam / Park / Adaptive Cornering Beam)

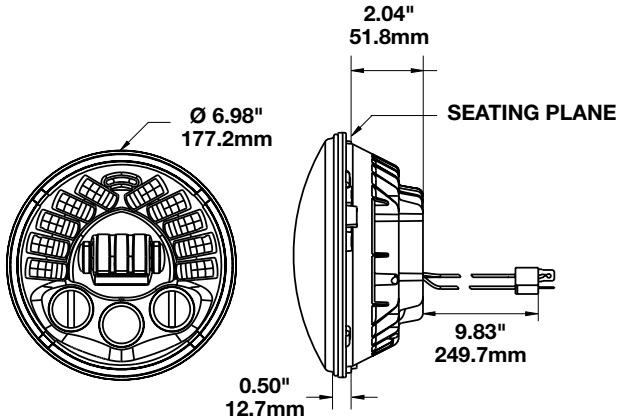

To see the adaptive technology in action visit
www.invisionsales.com

8790 Product Range - Adaptive

Part No.	Pattern	Bezel	Size	Pack Qty
0551321	Low/High/Park	Black	7”	Single
0551331	Low/High/Park	Chrome	7”	Single

PRODUCT SPECIFICATIONS

Light Source:	LED (Light Emitting Diodes)
Lumen Output:	Raw: 3,520 (High); 2,120 (Low) Effective: 1,600 (High); 1,020 (Low)
Candela Output:	High Beam: 60,000 Low Beam: 8,300
Input Voltage:	12V DC
Current Draw:	1.90A @ 12V DC (Low Beam) 3.20A @ 12V DC (High Beam) 0.21A @ 12V DC (Front Position) 4.20A @ 12V DC (Low Beam @ Full Lean)
Lens Material:	Polycarbonate
Body Material:	Aluminium
Mounting:	2D1 “PAR56” or 7” round headlights (Designed specifically for motorcycles)
Connector:	H4
Wiring:	Black Wire: Ground White Wire: High Beam Yellow Wire: Low Beam Red Wire: Front Position
Standards:	Sealed to IP67 ECE Reg 50 & 113 Class D Tested to ECE Reg 10 (Radiated Emissions Only) FMVSS 108 Table XX SAEJ575 & 584

EFFECTIVE LUMENS ISOLUX CHARTS

Illuminance
10+ Lux
1 Lux
0.25 Lux

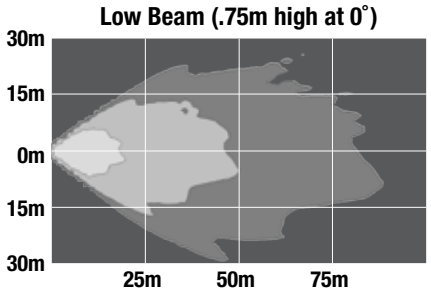

EFFECTIVE LUMENS ISOLUX CHARTS

Illuminance
10+ Lux
1 Lux
0.25 Lux

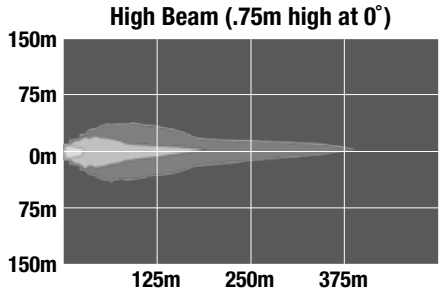

For mounting kits & applications visit
www.invisionsales.com

Model 8690

LED 5¾" Round Motorcycle Headlights

(Low Beam / High Beam / Park / Adaptive Cornering Beam)

PRODUCT SPECIFICATIONS

Light Source:	LED (Light Emitting Diodes)
Lumen Output:	Raw: 3,520 (High); 2,120 (Low) Effective: 1,600 (High); 1,020 (Low)
Candela Output:	High Beam: 60,000 Low Beam: 8,300
Input Voltage:	12V DC
Current Draw:	1.90A @ 12V DC (Low Beam) 3.20A @ 12V DC (High Beam) 0.21A @ 12V DC (Front Position) 4.20A @ 12V DC (Low Beam @ Full Lean)
Lens Material:	Polycarbonate
Body Material:	Aluminium
Mounting:	PAR46 sealed beams (Designed specifically for motorcycles)
Connector:	H4
Wiring:	Black Wire: Ground White Wire: High Beam Yellow Wire: Low Beam Red Wire: Front Position
Standards:	Sealed to IP67 ECE Reg 50 & 113 Class D FMVSS 108 Table XX SAEJ575 & 584

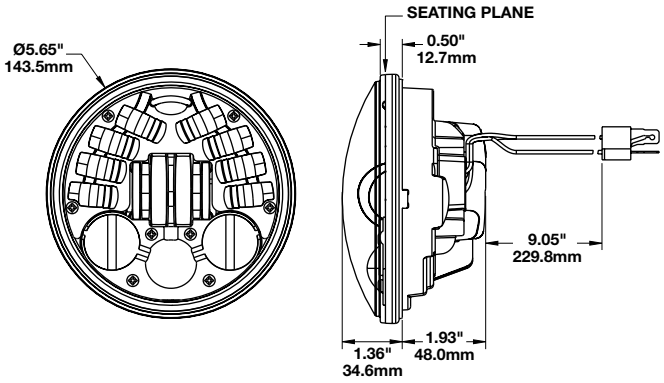

EFFECTIVE LUMENS ISOLUX CHARTS

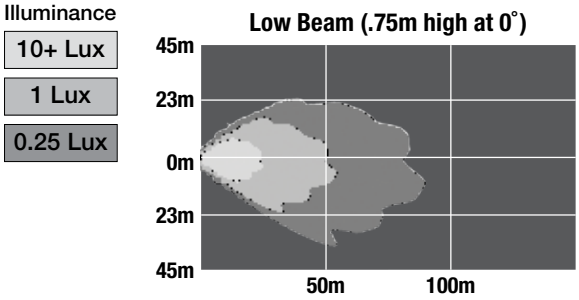

EFFECTIVE LUMENS ISOLUX CHARTS

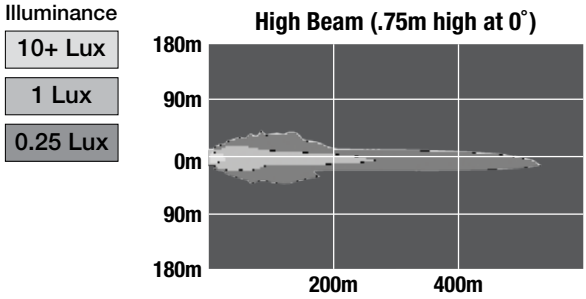

For mounting kits & applications visit
www.invisionsales.com

8690 Product Range - Adaptive

Part No.	Pattern	Bezel	Size	Pack Qty
0551721	Low/High/Park	Black	5¾" Round	Single
0551741	Low/High/Park	Chrome	5¾" Round	Single

8690 Product Range - Non Adaptive

Part No.	Pattern	Bezel	Size	Pack Qty
0551681	Low/High/Park	Black	5¾" Round	Single
0551731	Low/High/Park	Chrome	5¾" Round	Single

Model 8720

LED 7” Round Motorcycle Headlights
(Low Beam / High Beam / Park)

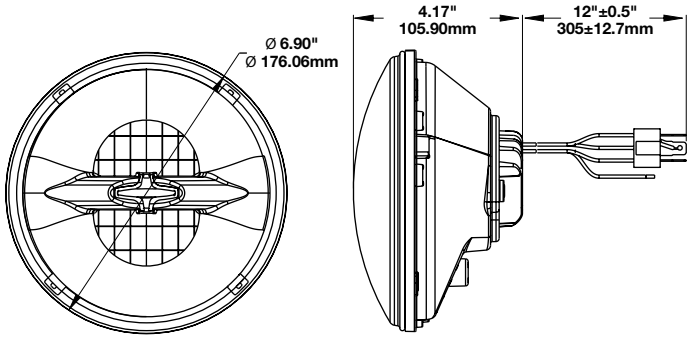

PRODUCT SPECIFICATIONS

Light Source:	LED (Light Emitting Diodes)
Lumen Output:	Raw: 1,620 (High); 925 (Low) Effective: 850 (High); 500 (Low)
Candela Output:	High Beam: 41,000 Low Beam: 12,110
Input Voltage:	12V DC
Current Draw:	1.67A @ 12V DC (Low Beam) 2.67A @ 12V DC (High Beam) 0.13A @ 12V DC (Front Position)
Lens Material:	Polycarbonate
Body Material:	Aluminium
Mounting:	2D1 “PAR56” or 7” round headlights (Designed specifically for motorcycles)
Connector:	H4
Wiring:	Black Wire: Ground White Wire: High Beam Yellow Wire: Low Beam Red Wire: Front Position
Standards:	Sealed to IP67 ECE Reg 50 & 113 Tested to ECE Reg 10 (Radiated Emissions Only) FMVSS 108 Table XX SAEJ584

EFFECTIVE LUMENS ISOLUX CHARTS

Illuminance
10+ Lux
1 Lux
0.25 Lux

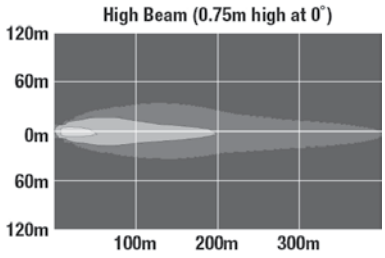

EFFECTIVE LUMENS ISOLUX CHARTS

Illuminance
10+ Lux
1 Lux
0.25 Lux

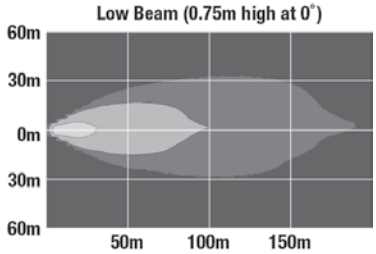

8720 Product Range

Part No.	Pattern	Bezel	Size	Pack Qty
0552861	Low/High/Park	Chrome	7” Round	Single

8720 Product Accessories - (Page 29)

Part No.	Description	Pack Qty
3156351	7” Round Mounting Ring Kit Assembly	Single

Model 8620

LED 5¾" Round Motorcycle Headlights

(Low Beam / High Beam / Park)

PRODUCT SPECIFICATIONS

Light Source:	LED (Light Emitting Diodes)
Lumen Output:	Raw: 1,620 (High); 925 (Low) Effective: 850 (High); 500 (Low)
Candela Output:	High Beam: 41,000 Low Beam: 12,110
Input Voltage:	12V DC
Current Draw:	1.67A @ 12V DC (Low Beam) 2.67A @ 12V DC (High Beam) 0.13A @ 12V DC (Front Position)
Lens Material:	Polycarbonate
Body Material:	Aluminium
Mounting:	PAR46 sealed beams (Designed specifically for motorcycles)
Connector:	H4
Wiring:	Black Wire: Ground White Wire: High Beam Yellow Wire: Low Beam Red Wire: Front Position
Standards:	Sealed to IP67 ECE Reg 50 & 113 Tested to ECE Reg 10 (Radiated Emissions Only) FMVSS 108 Table XX SAEJ584

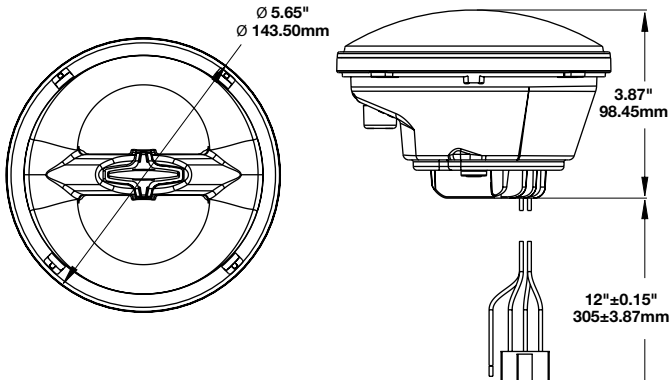

EFFECTIVE LUMENS ISOLUX CHARTS

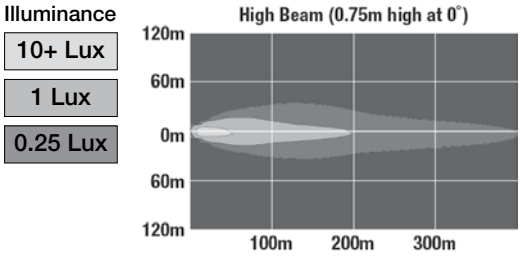

EFFECTIVE LUMENS ISOLUX CHARTS

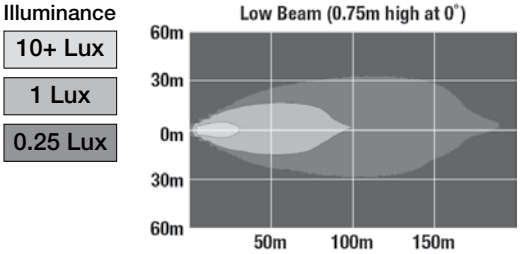

8620 Product Range - Adaptive

Part No.	Pattern	Bezel	Size	Pack Qty
0553011	Low/High/Park	Chrome	5¾" Round	Single

J.W. SPEAKER
Engineered. Lighting. Solutions.

Worklights

JW Speaker are the world leaders in LED worklight solutions for the mining, agriculture, industrial and transport industries.

The technology delivers specialised solutions to countries such as Canada, Germany, England, Chile, South Africa, Indonesia, New Zealand and Australia.

JW Speaker also engineers advanced LED lighting solutions for the worlds leading Original Equipment Manufacturers where the world's highest quality standards are demanded.

Model 4415

LED 3.5” Round Worklight

PRODUCT SPECIFICATIONS

Light Source:	LED (Light Emitting Diodes)
Lumen Output:	Raw: 2,450 Effective: 1,350
Input Voltage:	12-24V DC
Current Draw:	2.20A @ 12V DC 1.10A @ 24V DC
Lens Material:	Polycarbonate
Body Material:	Aluminium
Mounting:	Pedestal w/ swivel bracket
Connector:	Packard# 12084167
Wiring:	Red Wire: Positive Black Wire: Negative
Weight:	0.41 kgs (0.45kgs Mirror mount version)
Standards:	Sealed to IP67
Dimensions:	Height: 125.48mm Width: 85.09mm Depth: 56.90mm

EFFECTIVE LUMENS ISOLUX CHARTS

Illuminance

10+ Lux

1 Lux

0.25 Lux

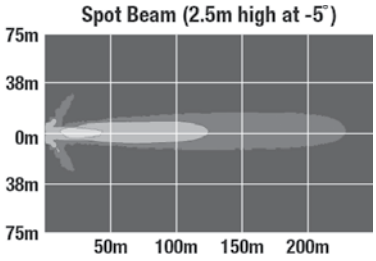

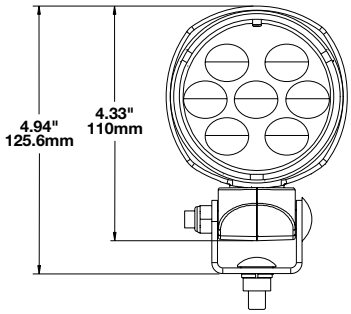

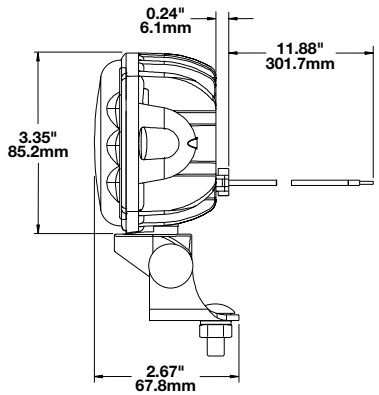

4415 Product Range

Part No.	Pattern	Lens	Voltage	Colour Temp	Pack QTY	Additional Information
0549841	Trapezoid	Polycarbonate	12-24V	White 5000K	Single	
0551001	Spot	Polycarbonate	12-24V	White 5000K	Single	
0551753	Spot	Polycarbonate	12-24V	White 5000K	Twin	Side view mirror mount (Left & Right)

Model 770XD

LED 5” x 3” Worklight

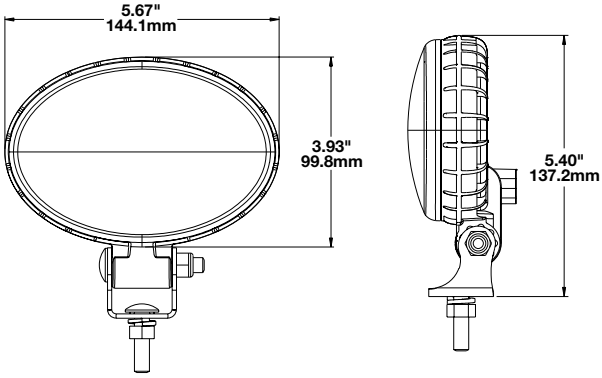

PRODUCT SPECIFICATIONS

Light Source:	LED (Light Emitting Diodes)
Lumen Output:	Raw: 900 Effective: 700
Input Voltage:	12-48V DC
Current Draw:	1.00A @ 12V DC 0.25A @ 48V DC
Lens Material:	Polycarbonate
Body Material:	Polycarbonate
Mounting:	Universal Pedestal Mount
Mounting Hardware:	(x1) 5/16”-18 x 1.00” Mounting Bolt
Connector:	Integrated 2-Pin Deutsch Weather-Proof Socket (DT04-2P)
Wiring:	Red Wire: Positive Black Wire: Negative
Weight:	0.24 kgs
Standards:	Sealed to IP67 CISPR 12 & 22 SAEJ1113-13 Tested to ECE Reg. 10 (Radiated Emissions Only)
Dimensions:	Height: 137.16mm Width: 144.02mm Depth: 56.90mm

EFFECTIVE LUMENS ISOLUX CHARTS

Illuminance

10+ Lux

1 Lux

0.25 Lux

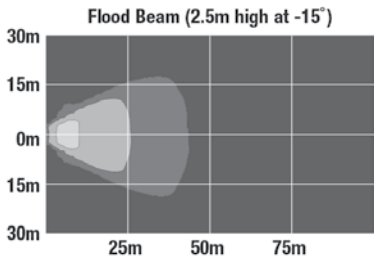

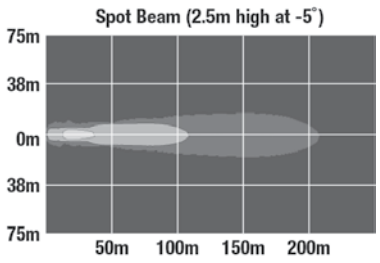

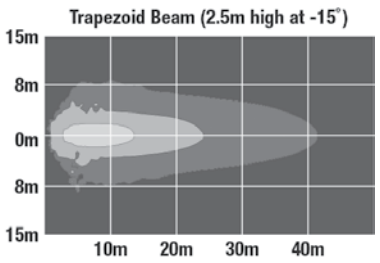

770XD Product Range

Part No.	Pattern	Lens	Voltage	Colour Temp
1706241	Flood	Polycarbonate	12-48V	White 5000K
1706261	Spot	Polycarbonate	12-48V	White 5000K
1706251	Trapezoid	Polycarbonate	12-48V	White 5000K

Model 735

LED 5” x 3” Worklight

PRODUCT SPECIFICATIONS

Light Source:	LED (Light Emitting Diodes)
Lumen Output:	Raw: 3,900 Effective: 2,600
Input Voltage:	12-24V DC
Current Draw:	3.50A @ 12V DC 1.75A @ 24V DC
Lens Material:	Polycarbonate
Body Material:	Aluminium
Mounting:	Universal Pedestal Mount
Mounting Hardware:	(x1) 5/16”-18 x 0.58” Mounting Bolt
Connector:	Integrated 2-Pin Deutsch Weather-Proof Socket (DT04-2P) 2-Pin Deutsch Weather-Proof Plug (DT06-2S)
Wiring:	Red Wire: Positive Black Wire: Negative
Weight:	0.70 kgs
Standards:	Sealed to IP69K
Dimensions:	Height: 137.16mm Width: 144.27mm Depth: 66.04mm

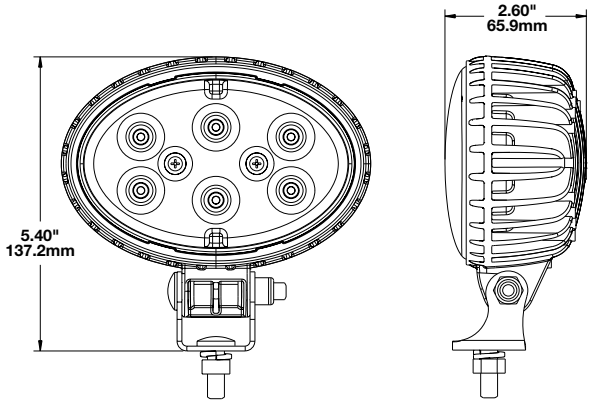

EFFECTIVE LUMENS ISOLUX CHARTS

Illuminance

10+ Lux

1 Lux

0.25 Lux

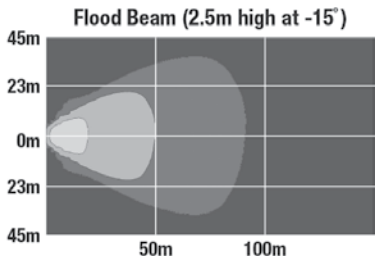

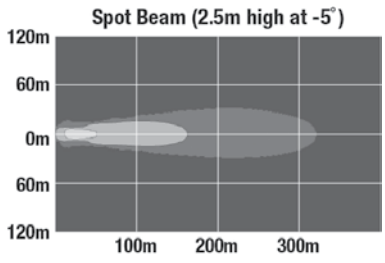

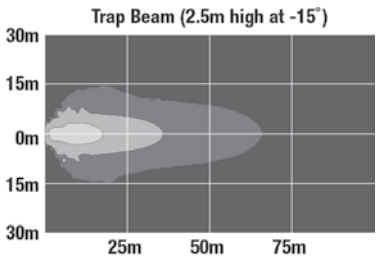

735 Product Range

Part No.	Pattern	Lens	Voltage	Colour Temp
1706591	Flood	Polycarbonate	12-24V	White 5700K
1706571	Spot	Polycarbonate	12-24V	White 5700K
1706581	Trapezoid	Polycarbonate	12-24V	White 5700K

Model 7250XD

LED 7” x 6” Worklight

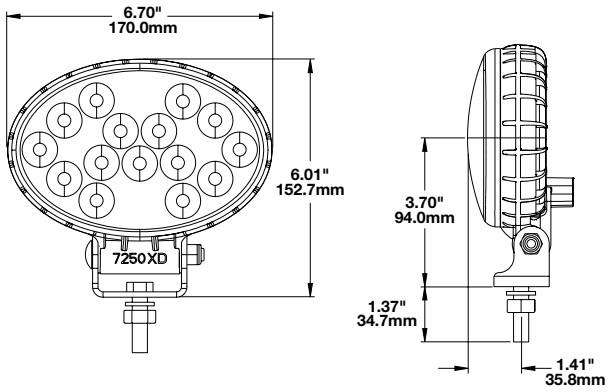

PRODUCT SPECIFICATIONS

Light Source:	LED (Light Emitting Diodes)
Lumen Output:	Raw: 3,150 Effective: 1,400
Input Voltage:	12-24V DC
Current Draw:	1.60A @ 12V DC 0.90A @ 24V DC
Lens Material:	Polycarbonate
Body Material:	Polycarbonate
Mounting:	Universal Pedestal Mount
Mounting Hardware:	(x1) 3/8-16 x 1.5” Stainless Steel Hex Head Bolt
Connector:	Integral DT04-2P & Deutsch DT06-2S
Wiring:	Red Wire: Positive Black Wire: Negative
Weight:	1.27 kgs
Standards:	Sealed to IP69K CISPR 12 & 22 SAEJ1113-13
Dimensions:	Height: 152.40mm Width: 170.18mm Depth: 68.58mm

EFFECTIVE LUMENS ISOLUX CHARTS

Illuminance

10+ Lux

1 Lux

0.25 Lux

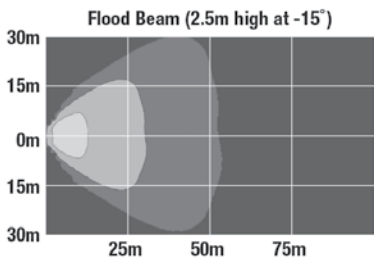

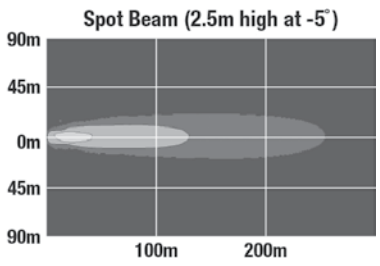

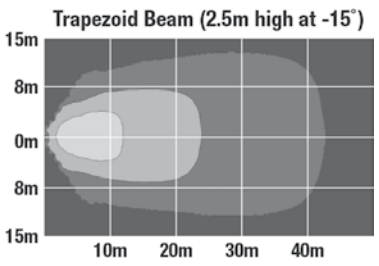

7250XD Product Range

Part No.	Pattern	Lens	Voltage	Colour Temp
1801521	Flood	Polycarbonate	12-24V	White 5000K
1801501	Spot	Polycarbonate	12-24V	White 5000K
1801511	Trapezoid	Polycarbonate	12-24V	White 5000K

Model 7150

LED 7” x 5” Worklight

PRODUCT SPECIFICATIONS

Light Source:	LED (Light Emitting Diodes)
Lumen Output:	Raw: 5,400 Effective: 4,500
Input Voltage:	12-24V DC
Current Draw:	5.50A @ 12V DC 3.20A @ 24V DC
Lens Material:	Polycarbonate
Body Material:	Aluminium
Mounting:	(x1) 1/2”-13 x 1”
Connector:	Deutsch DT04-2P & Deutsch DT06-2S
Wiring:	Red Wire: Positive Black Wire: Negative
Weight:	0.95 kgs
Standards:	Sealed to IP69K SAE J1113-13 CISPR 12 & 22
Dimensions:	Height: 155.96mm Width: 172.47mm Depth: 77.11mm

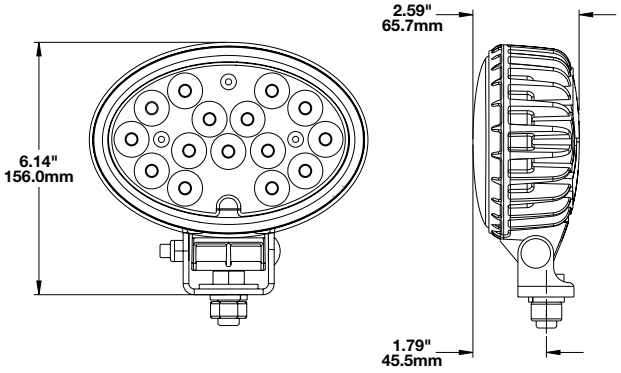

EFFECTIVE LUMENS ISOLUX CHARTS

Illuminance

- 10+ Lux
- 1 Lux
- 0.25 Lux

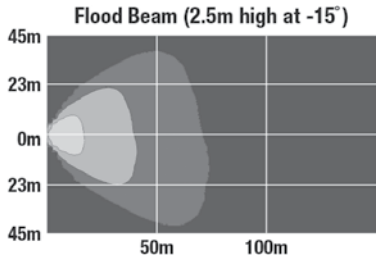

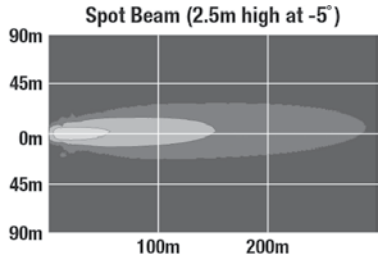

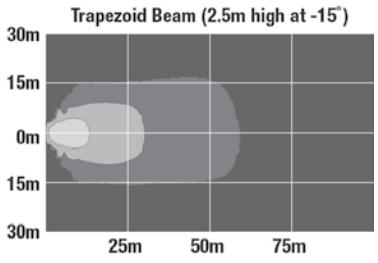

7150 Product Range

Part No.	Pattern	Lens	Voltage	Colour Temp
1801581	Flood	Polycarbonate	12-24V	White 5000K
1801621	Spot	Polycarbonate	12-24V	White 5000K
1801571	Trapezoid	Polycarbonate	12-24V	White 5000K

Model 840XD

LED 4” x 4” Worklight

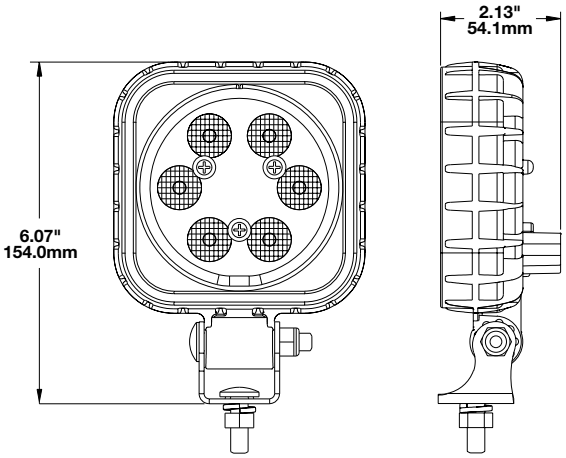

PRODUCT SPECIFICATIONS

Light Source:	LED (Light Emitting Diodes)
Lumen Output:	Raw: 1,080 Effective: 780
Input Voltage:	12-110V DC
Current Draw:	1.00A @ 12V DC 0.50A @ 24V DC 0.25A @ 48V DC 0.13A @ 110V DC
Lens Material:	Polycarbonate
Body Material:	Polycarbonate
Mounting:	Universal Pedestal Mount
Mounting Hardware:	(x1) 5/16”-18 x 1.00” Mounting Bolt
Connector:	Integrated 2-Pin Deutsch Weather-Proof Socket (DT04-2P)
Wiring:	Red Wire: Positive Black Wire: Negative
Weight:	0.66 kgs
Standards:	Sealed to IP69K CISPR 12 & 22 SAEJ1113-13 Tested to ECE Reg. 10 (Radiated Emissions Only)
Dimensions:	Height: 154.18mm Width: 113.28mm Depth: 54.10mm

EFFECTIVE LUMENS ISOLUX CHARTS

Illuminance

10+ Lux

1 Lux

0.25 Lux

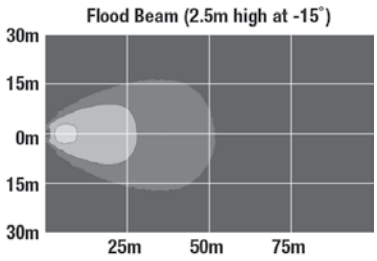

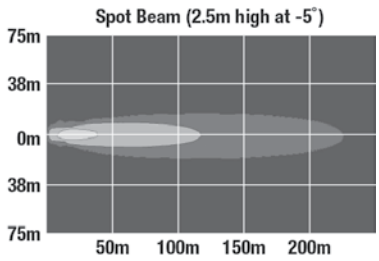

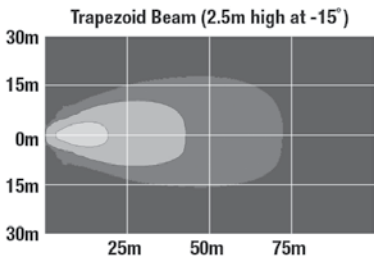

840XD Product Range

Part No.	Pattern	Lens	Voltage	Colour Temp
1300091	Flood	Polycarbonate	12-110V	White 5000K
1300101	Spot	Polycarbonate	12-110V	White 5000K
1300031	Trapezoid	Polycarbonate	12-110V	White 5000K

Model 832

LED 4” x 4” Worklight

PRODUCT SPECIFICATIONS

Light Source:	LED (Light Emitting Diodes)
Lumen Output:	Raw: 3,900 Effective: 2,400
Input Voltage:	12-24V DC
Current Draw:	3.50A @ 12V DC 1.75A @ 24V DC
Lens Material:	Polycarbonate
Body Material:	Aluminium
Mounting:	Universal Pedestal Mount
Mounting Hardware:	(x1) 5/16”-18 x 0.58” Mounting Bolt
Connector:	Integrated 2-Pin Deutsch Weather-Proof Socket (DT04-2P) 2-Pin Deutsch Weather-Proof Plug (DT06-2S)
Wiring:	Red Wire: Positive Black Wire: Negative
Weight:	0.75 kgs
Standards:	Sealed to IP69K
Dimensions:	Height: 154.94mm Width: 115.06mm Depth: 68.58mm

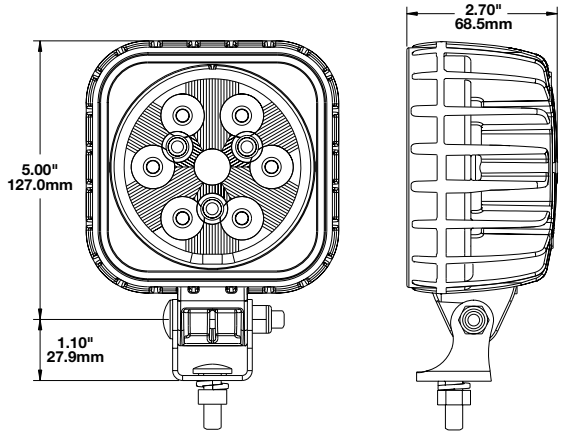

EFFECTIVE LUMENS ISOLUX CHARTS

Illuminance

- 10+ Lux
- 1 Lux
- 0.25 Lux

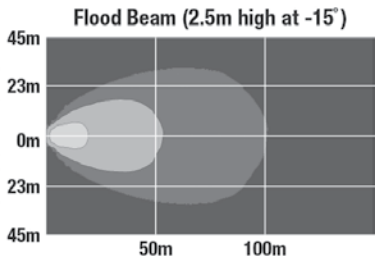

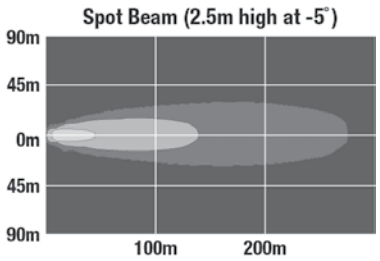

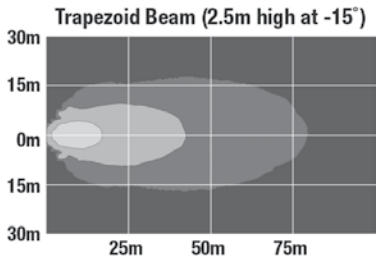

832 Product Range

Part No.	Pattern	Lens	Voltage	Colour Temp
1300181	Flood	Polycarbonate	12-24V	White 5700K
1300161	Spot	Polycarbonate	12-24V	White 5700K
1300171	Trapezoid	Polycarbonate	12-24V	White 5700K

Model 783XD

LED 6” x 2” Worklight

BUILT XD TOUGH

PRODUCT SPECIFICATIONS

Light Source:	LED (Light Emitting Diodes)
Lumen Output:	Raw: 675 Effective: 485
Input Voltage:	12-48V DC
Current Draw:	1.00A @ 12V DC 0.25A @ 48V DC
Lens Material:	Polycarbonate
Body Material:	Polycarbonate
Mounting:	Universal Mount
Mounting Hardware:	(x1) 3/8”-16 x 1.5” Mounting Bolt
Connector:	Integral DT04-2P & Deutsch DT06-2S
Wiring:	Red Wire: Positive Black Wire: Negative
Weight:	0.45 kgs
Standards:	Sealed to IP67 CISPR 12
Dimensions:	Height: 54.10mm Width: 169.67mm Depth: 45.21mm

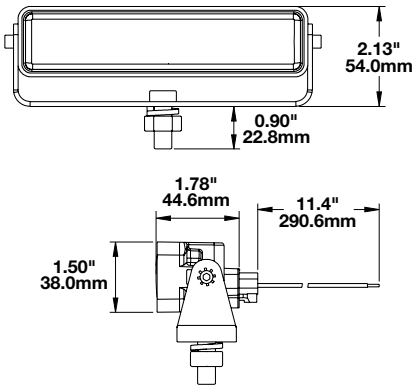

EFFECTIVE LUMENS ISOLUX CHARTS

Illuminance

- 10+ Lux
- 1 Lux
- 0.25 Lux

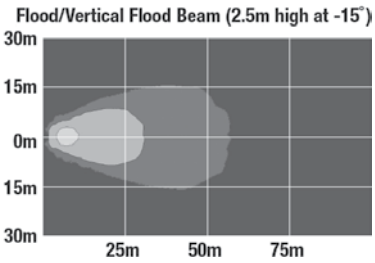

623 Product Range

Part No.	Pattern	Lens	Voltage	Colour Temp
1603391	Flood	Polycarbonate	12-48V	White 5000K
1603451	Vertical Flood	Polycarbonate	12-48V	White 5000K

Model 526

LED 6” x 6” Worklight

PRODUCT SPECIFICATIONS

Light Source:	LED (Light Emitting Diodes)
Lumen Output:	Raw: 9,000 Effective: 5,800
Input Voltage:	12-24V DC
Current Draw:	9.00A @ 12V DC 5.00A @ 24V DC
Lens Material:	Polycarbonate
Body Material:	Aluminium
Mounting:	Universal Pedestal Mount
Mounting Hardware:	(x1) M10-1.5 x 25 Mounting Bolt
Connector:	iCONN Connector - iMATE23
Wiring:	Red Wire: Positive, Black Wire: Negative
Weight:	2.04 kgs
Standards:	Sealed to IP69K
Dimensions:	Height: 160.02mm Width: 157.48mm Depth: 96.52mm

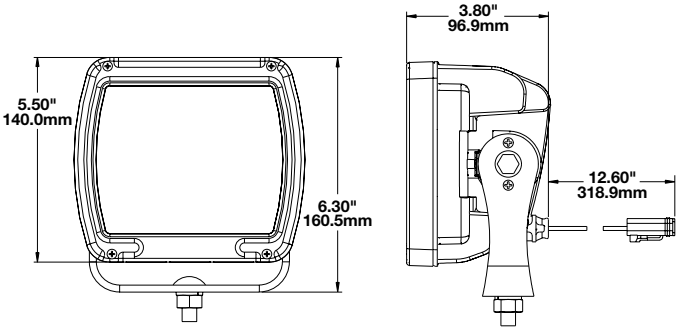

EFFECTIVE LUMENS ISOLUX CHARTS

Illuminance

- 10+ Lux
- 1 Lux
- 0.25 Lux

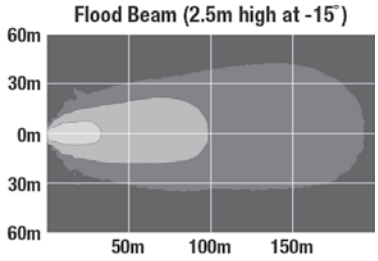

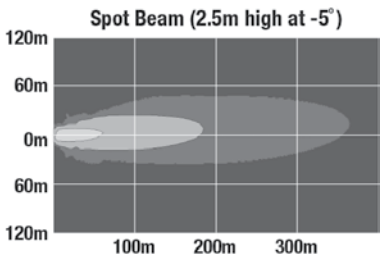

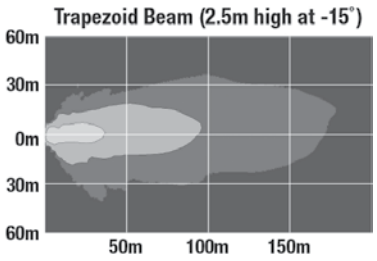

Illuminance

- 10+ Lux
- 1 Lux
- 0.25 Lux

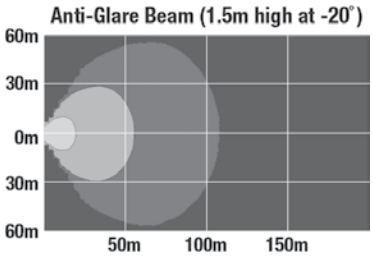

526 Product Range

Part No.	Pattern	Voltage	Colour Temp
1300431	Flood	12-24V	White 5700K
1300441	Spot	12-24V	White 5700K
1300451	Trapezoid	12-24V	White 5700K
1300461	Anti-Glare	12-24V	White 5700K

526XL Product Range - Yellow Housing

Part No.	Pattern	Voltage	Colour Temp
1300201	Flood	12-24V	White 5700K
1300221	Spot	12-24V	White 5700K
1300211	Trapezoid	12-24V	White 5700K
1300191	Anti-Glare	12-24V	White 5700K

Model 523

LED 9” x 8” Worklight

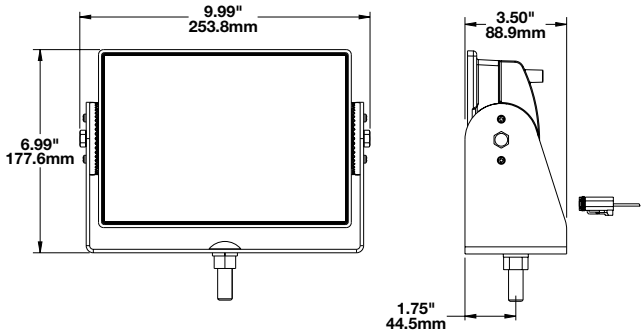

PRODUCT SPECIFICATIONS

Light Source:	LED (Light Emitting Diodes)
Lumen Output:	Raw: 8,100 Effective: 3,900
Input Voltage:	12-24V DC
Current Draw:	6.70A @ 12V DC 3.70A @ 24V DC
Lens Material:	Glass
Body Material:	Aluminium
Mounting:	Universal Pedestal Mount
Mounting Hardware:	(x1) 1/2”-Mounting Bolt
Connector:	Integrated 2-Pin Deutsch Weather-Proof Socket (DT04-2P)
Wiring:	Red Wire: Positive Black Wire: Negative
Weight:	3.05 kgs
Standards:	Sealed to IP67 (IP69K for 523XL Range)
Dimensions:	Height: 177.55mm Width: 253.75mm Depth: 88.90mm

EFFECTIVE LUMENS ISOLUX CHARTS

Illuminance

- 10+ Lux
- 1 Lux
- 0.25 Lux

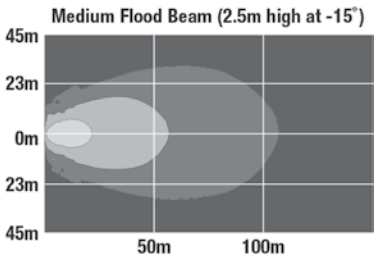

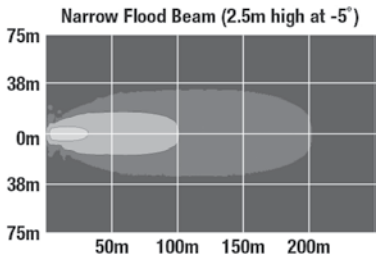

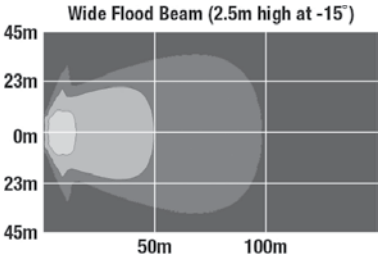

523 Product Range

Part No.	Pattern	Voltage	Colour Temp
0551431	Medium Flood	12-24V	White 5000K
0551441	Narrow Flood	12-24V	White 5000K
0551451	Wide Flood	12-24V	White 5000K

523XL Product Range - Yellow Housing

Part No.	Pattern	Voltage	Colour Temp
0549641	Narrow Flood	12-24V	White 5000K
0549631	Wide Flood	12-24V	White 5000K

Model 623

LED 20” x 9” Worklight

PRODUCT SPECIFICATIONS

Light Source:	LED (Light Emitting Diodes)
Lumen Output:	Raw: 40,000 Effective: 20,000
Input Voltage:	16-60V DC
Current Draw:	10.00A @ 24V DC 5.00A @ 48V DC
Lens Material:	Glass
Body Material:	Aluminium
Mounting:	Universal Pedestal Mount
Connector:	Wire Harness: SJ000W 6m Harness
Wiring:	Red Wire: Positive Black Wire: Negative
Weight:	8.16 kgs
Standards:	Sealed to IP69K
Dimensions:	Height: 216.41mm Width: 498.60mm Depth: 88.90mm

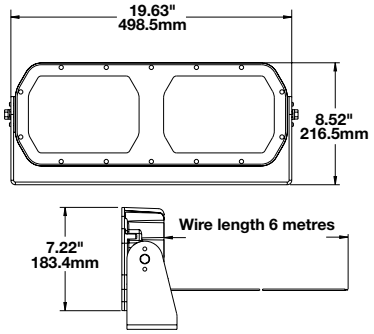

EFFECTIVE LUMENS ISOLUX CHARTS

Illuminance

10+ Lux

1 Lux

0.25 Lux

Medium Flood (2.5m high at -15°)

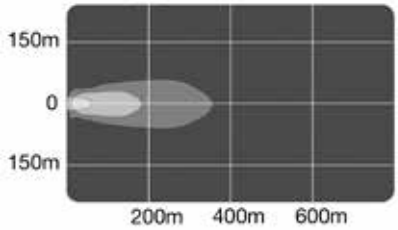

Narrow Flood (2.5m high at -5°)

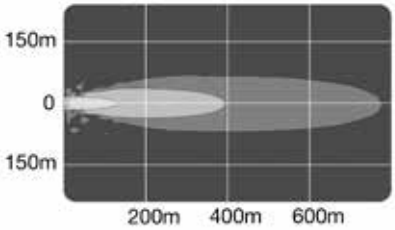

Medium Flood (2.5m high at -15°)

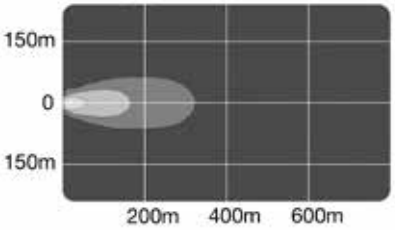

623 Product Range

Part No.	Pattern	Lens	Voltage	Colour Temp
0546681	Medium Flood	Polycarbonate	16-60V	White 5700K
0546671	Narrow Flood	Polycarbonate	16-60V	White 5700K
0546691	Wide Flood	Polycarbonate	16-60V	White 5700K

Emergency

JW Speaker is a worldwide supplier of quality emergency lighting to heavy duty markets such as mine sites, transport, agricultural and emergency services. The company is a world leader in achieving record levels of light output from LED technology and manufacturing light housings that protect the technology in the adverse conditions they operate under.

As specialists in heavy duty emergency lighting, JW Speaker has a comprehensive range of LED strobes, work lights and scene lights to suit every application.

JW Speaker emergency lighting are specifically designed to meet the stringent regulations in light output, sealing, EMI, vibration and construction. As with all JW Speaker products, the emergency range is designed and manufactured in the USA ensuring complete control over the on going quality management and engineering development.

Model 146

LED 65mm Warning Light

PRODUCT SPECIFICATIONS	
Light Source:	LED (Light Emitting Diodes)
Input Voltage:	12-48V DC
Current Draw:	0.100A @ 12V DC 0.050A @ 24V DC 0.035A @ 36V DC 0.030A @ 48V DC
Lens Material:	Polycarbonate
Body Material:	Polycarbonate
Mounting:	Low Profile - Two Point Mount
Connector:	6” Leads
Wiring:	Red Wire: Positive Black Wire: Negative
Weight:	0.10 kgs
Standards:	Sealed to IP67
Dimensions:	Height: 32.00mm Width: 121.92mm Depth: 121.92mm
Modes:	1: Warning Flash

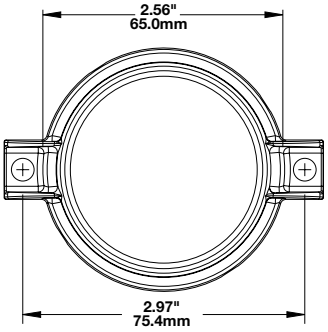

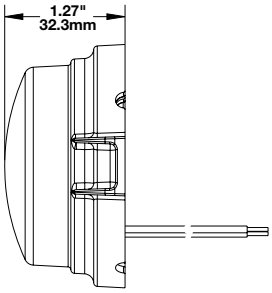

146 Product Range

Part No.	Pattern	Lens	Voltage	Colour Temp
0646321	Warning Flash	Polycarbonate	12-48V	Amber

Model 538

LED 3” Round Strobe Light - Class 3

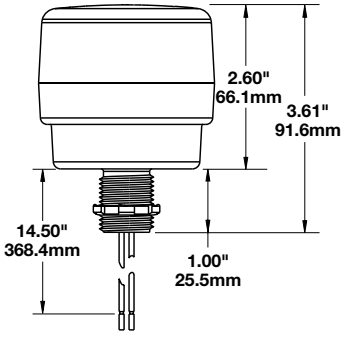

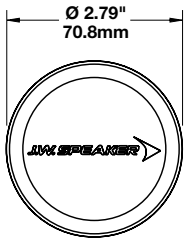

PRODUCT SPECIFICATIONS	
Light Source:	LED (Light Emitting Diodes)
Input Voltage:	12-80V DC
Current Draw:	0.50A @ 12V DC 0.20A @ 48V DC
Lens Material:	Acrylic
Body Material:	Impact-Resistant Nylon
Mounting:	Pipe Mount
Connector:	13.5” Leads
Wiring:	Red Wire: Positive Black Wire: Negative
Weight:	0.28 kgs
Standards:	
Dimensions:	Height: 131.83mm Width: 72.39mm Depth: 72.39mm
Modes:	1: Strobe - Flash Rate 60+/- 10 fpm

538 Product Range

Part No.	Pattern	Lens	Voltage	Colour Temp
0646391	Strobe	Acrylic	12-80V	Amber
0646401	Strobe	Acrylic	12-80V	Red
0646411	Strobe	Acrylic	12-80V	Green
0646421	Strobe	Acrylic	12-80V	Blue
0646431	Strobe	Acrylic	12-80V	White

Model 539

LED 3” Round Strobe Light - Class 3

PRODUCT SPECIFICATIONS	
Light Source:	LED (Light Emitting Diodes)
Input Voltage:	12-80V DC
Current Draw:	0.50A @ 12V DC 0.20A @ 48V DC
Lens Material:	Acrylic
Body Material:	Impact-Resistant Nylon
Mounting:	Two Point Flange Mount
Connector:	13.5” Leads
Wiring:	Red Wire: Positive Black Wire: Negative
Weight:	0.28 kgs
Standards:	
Dimensions:	Height: 111.51mm Width: 98.04mm Depth: 72.39mm
Modes:	1: Strobe - Flash Rate 60+/- 10 fpm

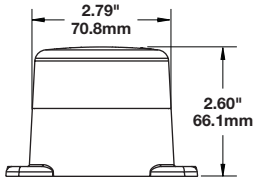

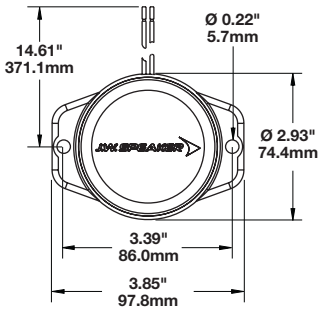

539 Product Range

Part No.	Pattern	Lens	Voltage	Colour Temp
0646441	Strobe	Acrylic	12-80V	Amber
0646451	Strobe	Acrylic	12-80V	Red
0646461	Strobe	Acrylic	12-80V	Green
0646471	Strobe	Acrylic	12-80V	Blue
0646481	Strobe	Acrylic	12-80V	White

J.W. SPEAKER
Engineered. Lighting. Solutions.

Model 406

LED 5” Round Strobe Light - Class 2

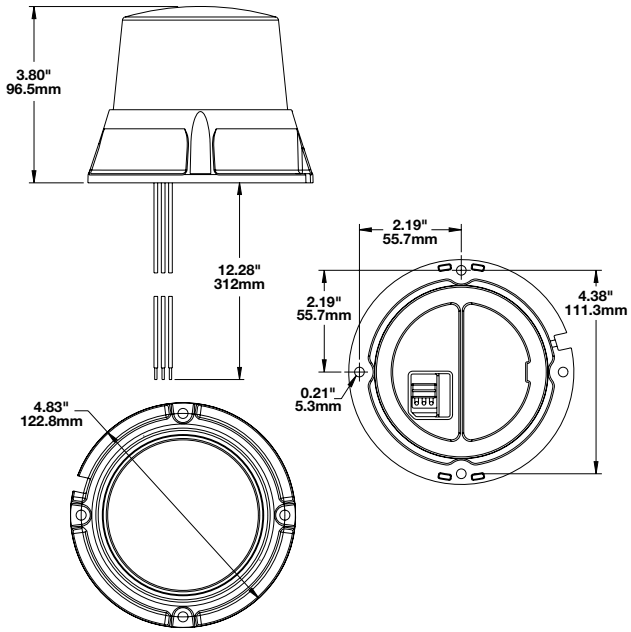

PRODUCT SPECIFICATIONS

Light Source:	LED (Light Emitting Diodes)
Candela Output:	280
Input Voltage:	12-80V DC
Current Draw:	0.345A @ 12V DC 0.225A @ 24V DC 0.163A @ 36V DC 0.131A @ 48V DC 0.100A @ 72V DC
Lens Material:	Polycarbonate
Body Material:	Polycarbonate
Mounting:	Four Point Mount
Mounting Hardware:	(x4) #8-16 x 3/4 Screw
Connector:	12” Leads
Wiring:	Red Wire: Positive Black Wire: Negative Yellow Wire: Mode Change
Weight:	0.59 kgs
Standards:	Sealed to IP69K SAEJ845 ECE Reg 10
Dimensions:	Height: 96.52mm Width: 121.92mm Depth: 121.92mm
Modes:	1: Beacon 2: Quadruple 480 3: Fast 540 4: Double 240 5: Burst 300 6: Steady Flash 60

*406 & 407
Pole Mount Accessory

406 Product Range

Part No.	Pattern	Lens	Voltage	Colour Temp
0646501	6 Mode	Polycarbonate	12-80V	Amber
0646531	6 Mode	Polycarbonate	12-80V	Blue
0646541	6 Mode	Polycarbonate	12-80V	Red

406 & 407 Product Accessories *

Part No.	Description
8200213	DIN Pole Mount for 406 & 407 LED Strobe Lights

Model 407

LED 5” Round Strobe Light - Class 1

PRODUCT SPECIFICATIONS

Light Source:	LED (Light Emitting Diodes)
Candela Output:	560
Input Voltage:	12-80V DC
Current Draw:	0.915A @ 12V DC 0.500A @ 24V DC 0.340A @ 36V DC 0.265A @ 48V DC 0.190A @ 72V DC
Lens Material:	Polycarbonate
Body Material:	Aluminium
Mounting:	Four Point Mount
Mounting Hardware:	(x4) #8-16 x 3/4 Screw
Connector:	12” Leads
Wiring:	Red Wire: Positive Black Wire: Negative Yellow Wire: Mode Change
Weight:	0.88 kgs
Standards:	Sealed to IP69K SAEJ845 ECE Reg 10 & 65
Dimensions:	Height: 96.52mm Width: 121.92mm Depth: 121.92mm
Modes:	1: Beacon 2: Quadruple 480 3: Fast 540 4: Double 240 5: Burst 300 6: Steady Flash 60

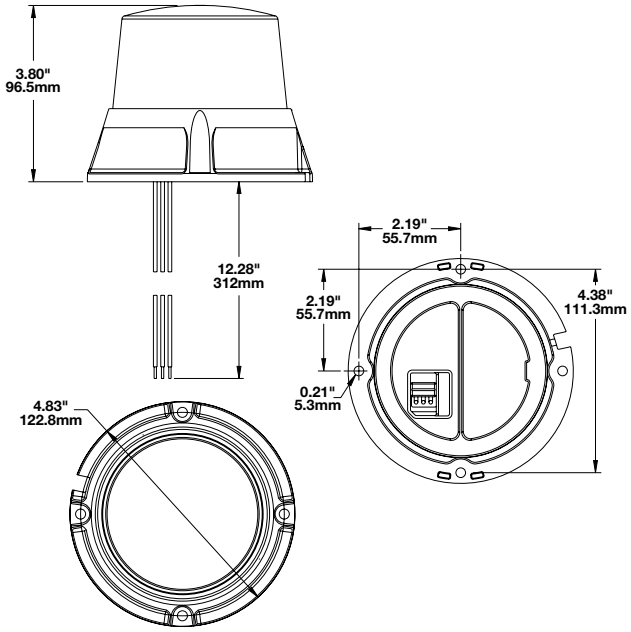

*406 & 407
Pole Mount Accessory

407 Product Range

Part No.	Pattern	Lens	Voltage	Colour Temp
0646491	6 Mode	Polycarbonate	12-80V	Amber
0646551	6 Mode	Polycarbonate	12-80V	Blue
0646561	6 Mode	Polycarbonate	12-80V	Red
0646571	6 Mode	Polycarbonate	12-80V	Green

406 & 407 Product Accessories *

Part No.	Description
8200213	DIN Pole Mount for 406 & 407 LED Strobe Lights

Zone Lighting

JW Speaker have taken Warning and Emergency lighting to a whole new level with the design and development of the Zone Warning Lamp ranges. These unique products create a clearly defined no go zone in red light or blue around a vehicle or machinery. At the flick of a switch, a Red Zone Warning Lamp instantly illuminates an entire area in powerful red light to clearly indicate the exclusion or warning zone. For larger areas, multiple units can be combined to create one large beam pattern making the product extremely versatile for any application.

JW Speaker understand the requirements of the heavy duty market, so have designed their Zone Warning Lamps bright enough to be visible in daylight making it ideal for use 24 hours a day. It's extremely important that vehicles and machinery have clearly marked no go zones even in the during the day, something no other product has been able to achieve.

Model 4415

LED 3.5” Round Safety Light - Blue & Red

PRODUCT SPECIFICATIONS	
Light Source:	LED (Light Emitting Diodes)
Lumen Output:	Effective: 276
Candela Output:	9,920
Input Voltage:	12-110V DC
Current Draw:	1.910A @ 12V DC 0.810A @ 24V DC 0.405A @ 48V DC 0.180A @ 110V DC
Lens Material:	Polycarbonate
Body Material:	Aluminium
Mounting:	Pedestal w/ swivel bracket
Mounting Hardware:	(x1) M8-20 x 1.25 Mounting Bolt Black ZP
Connector:	Packard# 12084167
Wiring:	Red Wire: Positive Black Wire: Negative
Weight:	0.41 kgs (0.45kgs Mirror mount version)
Standards:	Sealed to IP67
Dimensions:	Height: 125.48mm Width: 85.09mm Depth: 56.90mm

Application example: Agricultural boom light

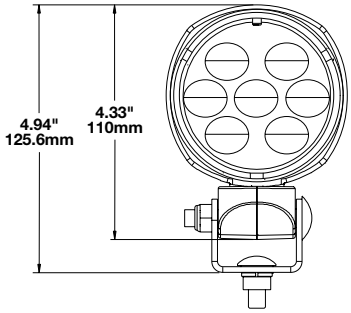

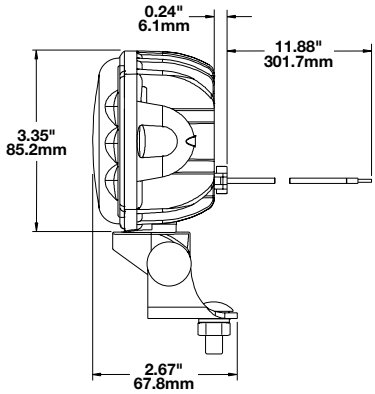

4415 Product Range

Part No.	Pattern	Lens	Voltage	Colour Temp
0552981	Keep Out Zone	Polycarbonate	12-110V	Red
0552991	Keep Out Zone	Polycarbonate	12-110V	Blue

Model 793

LED 6” x 2” Safety Light
Blue, Amber & Red

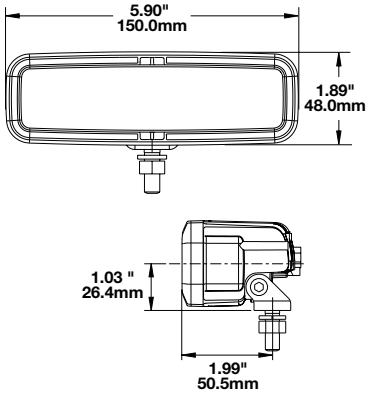

PRODUCT SPECIFICATIONS	
Light Source:	LED (Light Emitting Diodes)
Lumen Output:	Raw: 496 Effective: 110
Candela Output:	1,200
Input Voltage:	12-110V DC
Current Draw:	1.00A @ 12V DC 0.54A @ 24V DC 0.35A @ 48V DC 0.27A @ 110V DC
Lens Material:	Polycarbonate
Body Material:	Aluminium
Mounting:	Pedestal / Pendant
Mounting Hardware:	(x2) 5/16-18 x 1.00” Mounting Bolt
Connector:	Deutsch DT04-2P & Deutsch DT06-2S (Harness included with flying leads)
Wiring:	Black Wire: Negative Red Wire: Positive
Weight:	0.39 kgs
Standards:	Sealed to IP69K UL Recognised Tested to ECE Reg. 10 (Radiated Emissions Only)
Dimensions:	Height: 48.00mm Width: 150.00mm Depth: 63.00mm

793 Product Range

Part No.	Pattern	Lens	Voltage	Colour Temp
1603641	Keep Out Zone	Polycarbonate	12-110V	Blue
1603651	Keep Out Zone	Polycarbonate	12-110V	Amber
1603631	Keep Out Zone	Polycarbonate	12-110V	Red

Model 770

LED 5” x 3” Safety Light - Blue & Red

PRODUCT SPECIFICATIONS		
Light Source:	LED (Light Emitting Diodes)	
Input Voltage:	12-110V DC	
Current Draw:	**Blue** 0.50A @ 12V DC 0.12A @ 60V DC 0.08A @ 110V DC	**Red** 0.19A @ 12V DC 0.05A @ 60V DC 0.04A @ 110V DC
Lens Material:	Polycarbonate	
Body Material:	Polycarbonate	
Mounting:	Universal Pedestal Mount	
Mounting Hardware:	(x1) M10-1.5 x 25mm	
Connector:	Integrated 2-Pin Deutsch Weather-Proof Socket (DT04-2P)	
Wiring:	Red Wire: Positive Black Wire: Negative	
Weight:	0.59 kgs	
Standards:	Sealed to IP69K SAEJ1455 Tested to ECE Reg 10 (Radiated Emissions Only)	
Dimensions:	Height: 137.16mm Width: 144.27mm Depth: 87.88mm	

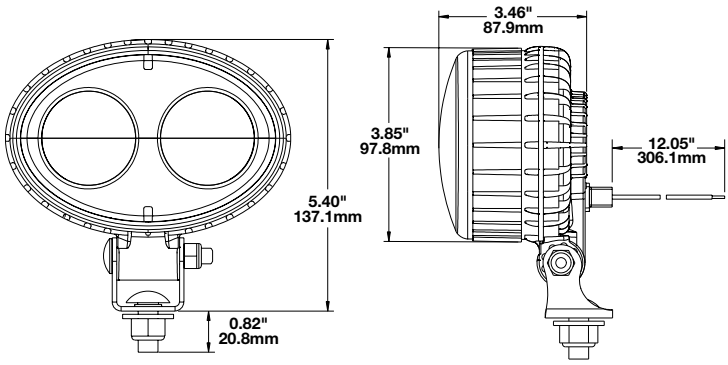

770 Product Range

Part No.	Pattern	Lens	Voltage	Colour Temp
1706311	Keep Out Zone	Polycarbonate	12-110V	Blue
1706441	Keep Out Zone	Polycarbonate	12-110V	Red

Model 527

LED 10” x 5” Safety Zone Light

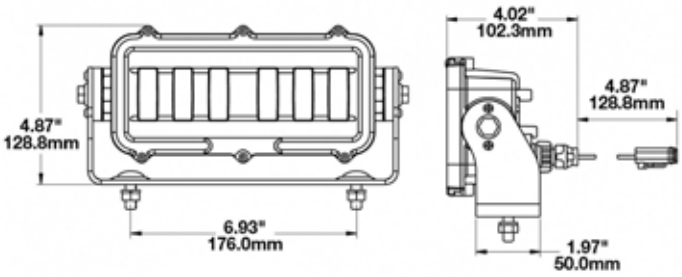

PRODUCT SPECIFICATIONS	
Light Source:	LED (Light Emitting Diodes)
Lumen Output:	Raw: 960 Effective: 400
Input Voltage:	12-24V DC
Current Draw:	1.20A @ 12V DC 0.80A @ 24V DC
Lens Material:	Glass
Body Material:	Xenoy
Mounting:	Universal Pedestal Mount
Mounting Hardware:	(x2) M8-1.25 Mounting Bolt
Connector:	Integrated 2-Pin Deutsch Weather-Proof Socket (DT04-2P)
Wiring:	Red Wire: Positive Black Wire: Negative
Weight:	1.18 kgs
Standards:	Sealed to IP69K
Dimensions:	Height: 177.60mm Width: 253.80mm Depth: 88.90mm

527 Product Range

Part No.	Pattern	Voltage	Colour Temp
0549271	Keep Out Zone	12-24V	Red
0551271	Keep Out Zone	12-24V	Green
0551281	Keep Out Zone	12-24V	Amber
0551261	Keep Out Zone	12-24V	White

527 Product Accessories - (Page 29)

Part No.	Description	Pack Qty
8200151	527 - Protective Rock Guard Kit	Single

Model 523BLU

LED 10” x 7” Safety Zone Light - Blue

PRODUCT SPECIFICATIONS	
Light Source:	LED (Light Emitting Diodes)
Lumen Output:	Raw: 1,675 Effective: 864
Candela Output:	42,300
Input Voltage:	24V DC
Current Draw:	4.30A @ 24V DC
Lens Material:	Glass
Body Material:	Aluminium
Mounting:	Universal Pedestal Mount
Mounting Hardware:	(x1) 1/2”-Mounting Bolt
Connector:	Integrated 2-Pin Deutsch Weather-Proof Socket (DT04-2P)
Wiring:	Red Wire: Positive Black Wire: Negative
Weight:	3.05 kgs
Standards:	Sealed to IP67
Dimensions:	Height: 177.60mm Width: 253.80mm Depth: 88.90mm

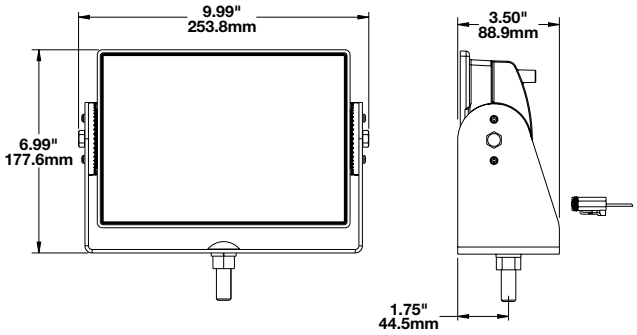

523BLU Product Range

Part No.	Pattern	Lens	Voltage	Colour Temp
0551231	Keep Out Zone	Glass	12-80V	Blue

Signalling

The JW Speaker LED signalling lighting range is ideal of vehicles like trucks, mining vehicles and 4WDs that experience harsh conditions and long hours of use. Being the world's most innovative manufacturer of heavy duty LED lighting products, Speakers engineer's have custom designed this series of rear lighting to incorporate new technologies, making it the most advanced range on the market.

The JW Speaker commitment to advanced, solid-state lighting technology has enabled the range to meet the requirements of Australia's transport and mining industries.

Model 223

LED 5” x 5” Multi-Function Signal Light

PRODUCT SPECIFICATIONS	
Light Source:	LED (Light Emitting Diodes)
Input Voltage:	12-24V DC
Current Draw:	2.25A @ 12V DC (Turn) 0.25A @ 12V DC (Front Position)
Lens Material:	Acrylic
Body Material:	ABS
Mounting:	Low Profile Mount
Mounting Hardware:	(x2) M6-1 x 25 Mounting Bolts
Connector:	Integrated 4-Pin Deutsch Socket (DT04-4P) 4-Pin Deutsch Plug (DT06-4S)
Wiring:	**0341711** White Wire: Positive Yellow Wire: Turn Black Wire: Ground **0341701** White Wire: Tail Yellow Wire: Turn Red Wire: Stop Black Wire: Ground
Weight:	0.21 kgs
Standards:	Sealed to IP67
Dimensions:	Height: 127.00mm Width: 127.00mm Depth: 48.26mm

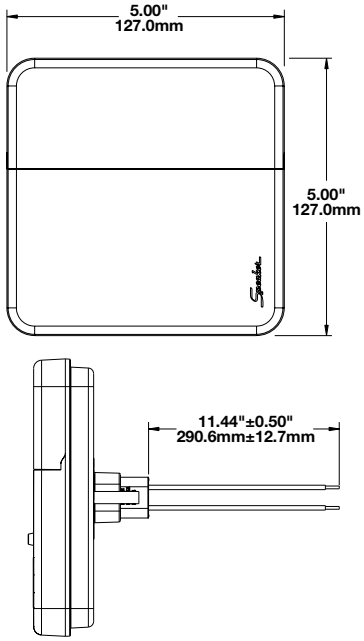

223 Product Range

Part No.	Pattern	Lens	Voltage	Colour Temp
0341711	Front Position / Turn Signal	Acrylic	12-24V	White / Amber
0341701	Stop / Tail / Turn Signal	Acrylic	12-24V	Red / Amber

Model 224

LED 5” x 5” Signal Light

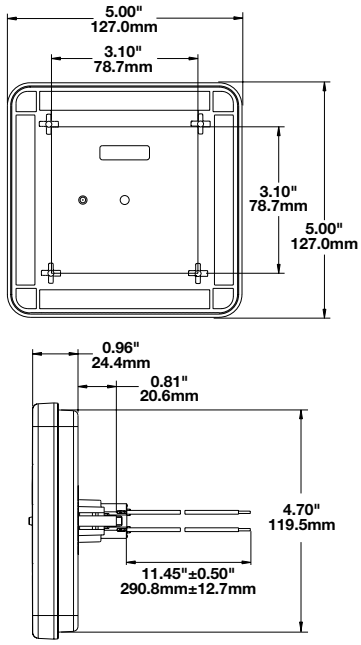

PRODUCT SPECIFICATIONS

Light Source:	LED (Light Emitting Diodes)
Input Voltage:	12-24V DC
Current Draw:	**0442611** 0.145A @ 12V DC 0.082A @ 24V DC **0342301** 0.190A @ 12V DC (Stop) 0.030A @ 12V DC (Tail) **0342291** 2.200A @ 12V DC 1.140A @ 24V DC
Lens Material:	Acrylic
Body Material:	ABS
Mounting:	Low Profile Mount
Mounting Hardware:	(x2) M6-1 x 25 Mounting Bolts
Connector:	Integrated 4-Pin Deutsch Socket (DT04-4P) 4-Pin Deutsch Plug (DT06-4S)
Wiring:	**0442611** White Wire: Backup Black Wire: Ground **0342301** White Wire: Tail Red Wire: Stop Black Wire: Ground **0342291** Yellow Wire: Turn Black Wire: Ground
Weight:	0.21 kgs
Standards:	Sealed to IP67 ECE Reg 23 SAEJ593 FMVSS 108 Table XII
Dimensions:	Height: 127.00mm Width: 127.00mm Depth: 44.96mm

224 Product Range

Part No.	Pattern	Lens	Voltage	Colour Temp
0442611	Reverse	Acrylic	12-24V	White
0342301	Stop / Tail	Acrylic	12-24V	Red
0342291	Turn Signal	Acrylic	12-24V	Amber

Model 265

LED 11” x 4” Multi-Function Signal Light

PRODUCT SPECIFICATIONS	
Light Source:	LED (Light Emitting Diodes)
Input Voltage:	12-24V DC
Current Draw:	0.325A @ 12V DC (Stop) 0.200A @ 24V DC (Stop) 0.060A @ 12V DC (Tail) 0.035A @ 24V DC (Tail) 0.425A @ 12V DC (Turn) 0.325A @ 24V DC (Turn) 0.325A @ 12V DC (Reverse) 0.350A @ 24V DC (Reverse)
Lens Material:	Acrylic
Body Material:	ABS
Mounting:	Low Profile Mount
Mounting Hardware:	(x2) M6-1 x 25 Mounting Bolts
Connector:	6-Pin Deutsch Socket (DT04-6P-E004) 6-Pin Deutsch Plug (DT06-6S)
Wiring:	White Wire: Reverse Yellow Wire: Turn Red Wire: Stop Brown Wire: Tail Black Wire: Ground
Weight:	0.61 kgs
Standards:	Sealed to IP67 ECE Reg 3, 6, 7 & 23 SAEJ 575, 585, 586, 588, 593, 594, 2040 & 2261 FMVSS 108 Table VII, VIII, IX, XII & XVI
Dimensions:	Height: 136.65mm Width: 287.53mm Depth: 33.78mm

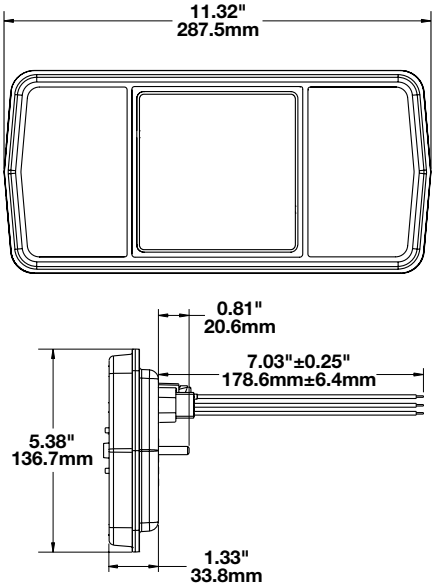

265 Product Range

Part No.	Pattern	Lens	Voltage	Colour Temp
0342421	Stop / Tail / Turn Signal / Reverse	Acrylic	12-24V	Red / Amber / White

Model 281

LED 2” x 9” Multi-Function Signal Light

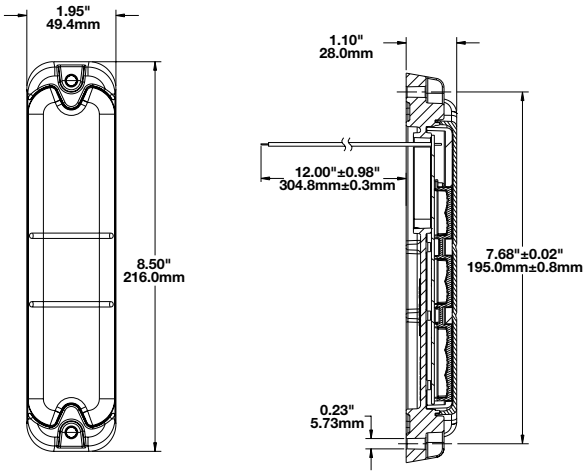

PRODUCT SPECIFICATIONS	
Light Source:	LED (Light Emitting Diodes)
Input Voltage:	12V, 24 - 36V & 48V DC
Current Draw:	0.40A @ 12V DC
Lens Material:	Polycarbonate
Body Material:	ABS
Mounting:	Low Profile Mount
Connector:	12” Bare Leads
Wiring:	White Wire: Reverse Yellow Wire: Turn Red Wire: Stop White/Red Wire: Tail Black Wire: Ground
Weight:	0.29 kgs
Standards:	Sealed to IP67
Dimensions:	Height: 215.90mm Width: 49.53mm Depth: 27.94mm

281 Product Range

Part No.	Pattern	Lens	Voltage	Colour Temp
0338061	Stop / Tail / Turn Signal / Reverse	Polycarbonate	12V	Red / Amber / White
0338091	Stop / Tail / Turn Signal / Reverse	Polycarbonate	24 - 36V	Red / Amber / White
0339011	Stop / Tail / Turn Signal / Reverse	Polycarbonate	48V	Red / Amber / White

Model 283

LED 2” x 9” Multi-Function Signal Light

PRODUCT SPECIFICATIONS

Light Source:	LED (Light Emitting Diodes)
Input Voltage:	12 - 24V DC
Current Draw:	0.151A @ 12V DC (Stop) 0.008A @ 12V DC (Tail) 0.161A @ 12V DC (Turn) 0.078A @ 24V DC (Stop) 0.008A @ 24V DC (Tail) 0.084A @ 24V DC (Turn)
Lens Material:	Polycarbonate
Body Material:	ABS
Mounting:	Low Profile Mount
Connector:	12” Bare Leads
Wiring:	Red Wire: Stop White Wire: Tail Green Wire: Turn Black Wire: Ground
Weight:	0.29 kgs
Standards:	Sealed to IP67 ECE Reg 6 & 7
Dimensions:	Height: 215.90mm Width: 49.53mm Depth: 27.94mm

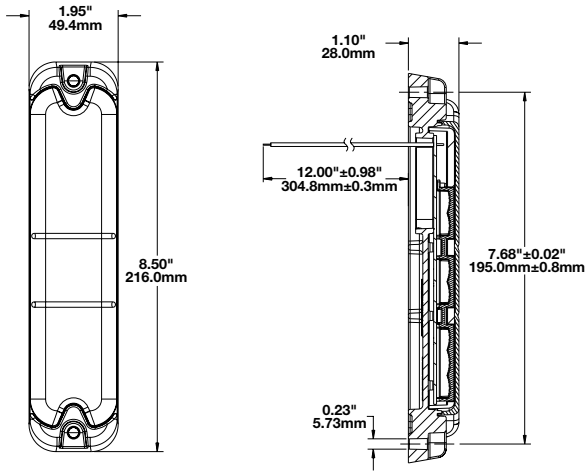

283 Product Range

Part No.	Pattern	Lens	Voltage	Colour Temp
0339921	Stop / Tail / Turn Signal	Acrylic	12-24V	Red / Amber

J.W. SPEAKER
Engineered. Lighting. Solutions.

Model 279J

LED 6” x 8” Jeep Tail Light Kit

(Contains left and right side units)

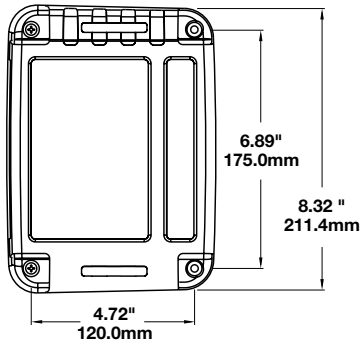

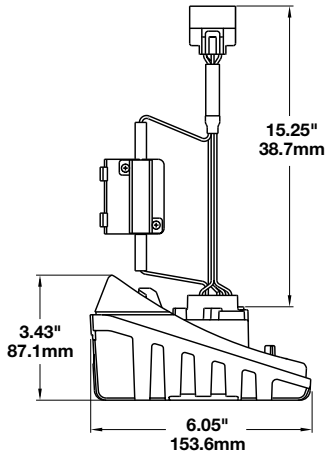

PRODUCT SPECIFICATIONS

Light Source:	LED (Light Emitting Diodes)
Input Voltage:	12-24V DC
Current Draw:	0.082A @ 12V DC (Tail) 0.082A @ 24V DC (Tail) 0.253A @ 12V DC (Stop) 0.138A @ 24V DC (Stop) 0.321A @ 12V DC (Turn) 0.168A @ 24V DC (Turn) 0.134A @ 12V DC (Reverse) 0.100A @ 24V DC (Reverse)
Lens Material:	Acrylic
Body Material:	Polycarbonate
Mounting:	Rear Light - Jeep JK Wrangler
Mounting Hardware: Screw	(x4) #8-16 x 2 Pan Head, Self Tapping Plastite
Connector:	YAZAKI 7282-5553-30 & YAZAKI 7287-2779-30
Wiring:	Black Wire: Ground Purple Wire: Tail Yellow Wire: Turn Green Wire: Reverse Red Wire: Stop
Standards:	Sealed to IP67 ECE Reg 3, 6, 7, 23 & 91
Dimensions:	Height: 210.31mm Width: 153.67mm Depth: 87.12mm

Designed specifically to suit Jeep

279J Product Range

Part No.	Pattern	Lens	Voltage	Colour Temp
0347541	Stop / Tail / Turn Signal / Reverse	Acrylic	12-24V	Red / Amber / White

Model 239 J2

LED 3.5” Round Front Indicator

Retro-fit into the Jeep Wrangler’s front grille

PRODUCT SPECIFICATIONS	
Description:	12V DOT/ECE LED Round Turn Signals with Amber Lens - 2 Light Kit
Light Source:	LED (Light Emitting Diodes)
Lumen Output:	N/A
Input Voltage:	12V DC
Operating Voltage:	9-16V DC
Current Draw:	0.09A @ 12V DC (Front Position) 1.91A @ 12V DC (Turn)
Lens Material:	Acrylic
Body Material:	Aluminium
Mounting:	Grille Mount (x1) JK Mounting Bracket with SS bolt
Retrofits:	Factory Jeep JK Front Turn Signals
Connector:	Leads with Connector Delphi 13590270
Beam Pattern:	Signalization - Front Position Signalization - Turn (Front)
Standards:	Sealed to IP67 ECE Reg 6 SAE J588 FMVSS 108 Table VI

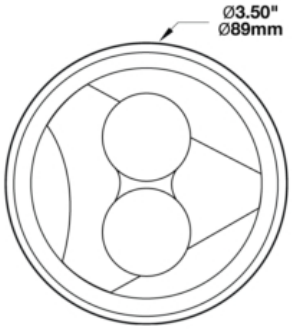

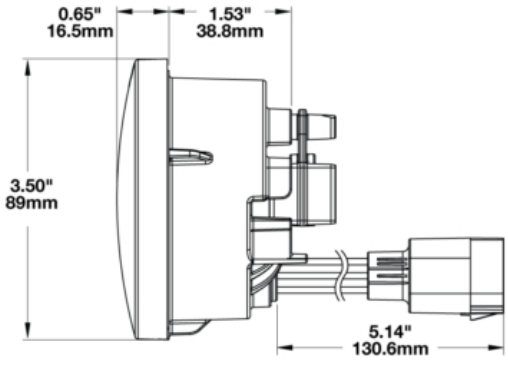

Designed specifically to suit Jeep

239 Product Range

Part No.	Description	Pack Qty
0346483	Amber Front Indicator	2
0346493	Clear Front Indicator	2
0346503	Smoke Front Indicator	2

AC/DC Converters

DC-powered LED lighting solutions in your AC-powered applications.

Converter Boxes

6404 Converter Box

Part No.	Description	Input Voltage	Output Voltage	Wattage
0842291	Converter Box	100-240V	24V	35W

Dimensions: 200 x 78 x 49mm

6406 Converter Box

Part No.	Description	Input Voltage	Output Voltage	Wattage
0842301	Converter Box	100-277V	24V	150W
0842311	Converter Box	100-277V	24V	240W

Dimensions: 281 x 106 x 58mm

AC Input Harnesses

AC Input Harness with ICONN connector

Part No.	Description	Length
3269651	AC Input Harness	3 Meters

AC Input Harness with ICONN connector

Part No.	Description	Length
3269661	AC Input Harness	10 Meters

DC Output Harnesses

DC Output Harness with ICONN connector

Part No.	Description	Length
3269371	DC Output Harness	1 Meter

DC Output Harness with ICONN connector

Part No.	Description	Length
3269671	DC Output Harness	3 Meters

DC Output Harness with DC Terminal Kit

Part No.	Description	Length
3269681	DC Output Harness	3 Meters

J. W. SPEAKER CORPORATION

OPERATIONAL EXCELLENCE

J.W. SPEAKER CORPORATION

- Founded in 1935 by John W. Speaker
- Privately held, family owned
- 500 employees
- Operated by co-presidents Tim & Jamie Speaker
- Products made in the USA
- Specialize in advanced LED lighting solutions
- Serve OEM & Aftermarket customers

OPERATIONS & CAPABILITIES

- Head office in Germantown, Wisconsin, USA
- Two locations: Freistadt & Whitney, ~350k sq. ft.
- In-house SMT printed circuit board assembly
- Injection moulding & vacuum metallizing
- Wiring harness assembly
- Robotic assembly & transfer lines (Freistadt)
- Dedicated aftermarket facility (Whitney)
- In-house design, development & testing
- Optical engineering & 3D modelling; Virtual Reality Lab

J.W. SPEAKER®
Engineered. Lighting. Solutions.

LIGHTING

RANGE CATALOGUE

For further details about the JW Speaker range contact Invision Sales.

Invision Sales are the Asia Pacific distributors for JW Speaker Corporation.

Edition 2. Release date October 2017

INVISION lighting technology

www.invisionsales.com
enquiries@ invisionsales.com
Ph: 03 9336 2066

J.W. SPEAKER® Engineered. Lighting. Solutions.